Pilot operated 5-port valve ISO valve

Overview

The PV5G/PV5 series ISO valves are pilot operated 5-port valves in compliance with the ISO standards which regulate international valve mounting dimensions.
Suitable for operating cylinders of up to φ160.

Features

Compliant with ISO standards
The mounting pitch, thread size, and flow path dimensions of the valve body are in accordance with ISO standards.

Energy saving
A low wattage design of 1 W (without lamp) and 1.2 W (with lamp) will contribute to conservation of energy.

Space saving
Compact design with a valve width of 38 to 50 mm. Contributes to reduction of the size of devices, etc., being assembled.

Degree of protection of IP65 or equivalent
The dust-proof and jet-proof structure of IP65 or equivalent is suitable for harsh environments.

Resource saving
Use of special soft packing.
Can be used with no lubrication

Compatible with long term use
The soft spool method with proven performance has been employed.
Service life is long.

Compatible with driving a 2-piston cylinder
The exhaust pressurized type has been made available as a series.
Optimal for driving a 2-piston cylinder used in welders, etc.

Abundant options available
Size 1 and size 2 mix manifolds.

Introducing the new ISO valve that's now more

New ISO valve PV5G / PV5 / GMF Series that's compact, lightweight and energy efficient, with improved operability, service life and environmental performance.

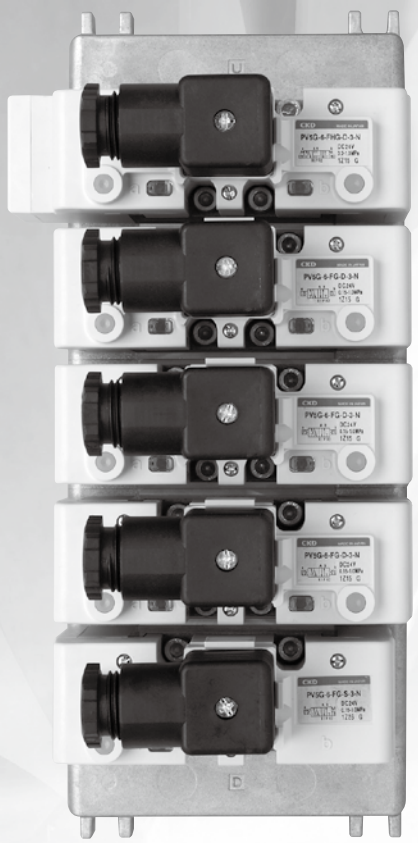

Compact body size

It has become more compact while improving the total performance.

compared to CKD conventional products **10%** LESS

Improvement of operability

Manual buttons and conduction indicator lamp are optimally positioned in consideration of the ease of operation, visibility, etc. Operability has improved in adjustment, maintenance and the like when installing.

Uses 2-color display lamp

Solenoid a: red
Solenoid b: green

▼Enlarged view

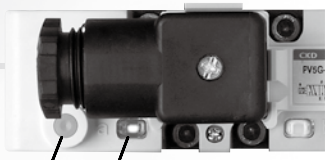

Improvement of reliability and safety

Rubber cover for manual override button.
Prevents intake of foreign matter leading to misoperation.
It emphasizes safety, making it ideal for operation using manual tools.

Simple, easy piping

The valve body does not protrude over the base of the manifold, and does not interfere with the rotation of a wrench or similar tool, thus promoting efficient piping work.

Wrench can be rotated at a large angle.

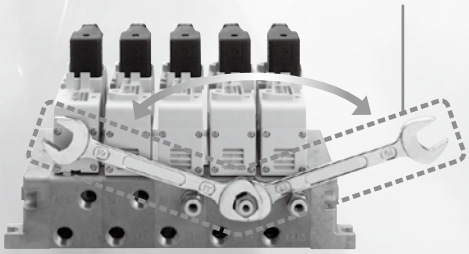

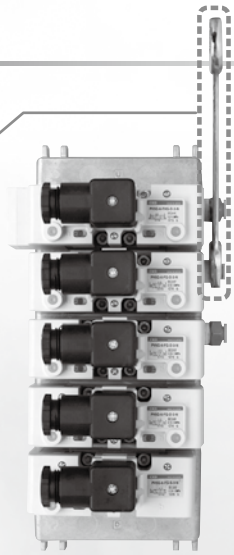

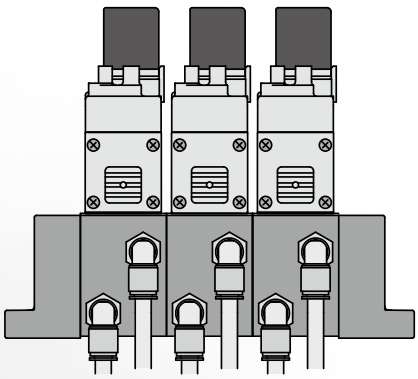

A/B ports are placed offset, making it easier to install fittings.

compact and easier to use.

CKD Green Technology

Low wattage design **1W**

Power consumption is reduced from conventional 1.8 W to 1 W.
Significantly more energy efficient.

Standard I/O connector

DIN terminal box and I/O connector are available as standard for wire connections.

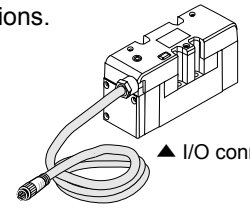

▲ I/O connector

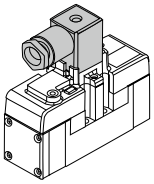

▲ DIN terminal box

RoHS compliant

Has an environment-friendly design which is compliant to RoHS Directive.

RoHS

Degree of protection of **IP65** or equivalent

The dust-proof and water jet-proof structure of IP65 or equivalent is suitable for harsh environments.

Longer service life

Service life is further extended by improvements in structure of sliding section and packing, etc.

Lighter weight

The body is made of aluminum and the rest is resin. Features a lightweight design.

Compliant with ISO standards

Pilot operated pneumatic 5-port valve with mounting pitch, thread size and flow path dimensions that are in accordance with ISO standards.

Improved design

The design has been renewed with white coloring and rounded corners.

■ PV5G/PV5/GMF/PV5S-0 Series

	Series/appearance			Applicable cylinder bore size	Port size		Voltage
ISO size 1	Single valve **PV5G-6** Series 	DIN terminal box	Manifold **GMF1** Series 	MAX. φ100	P/A/B R_1/R_2	Rc1/4,Rc3/8 Rc3/8,Rc1/2	100 VAC 110 VAC 200 VAC 220 VAC 12 VDC 24 VDC
	Single valve **PV5-6R** Series 	I/O connector			P/A/B R_1/R_2	Rc1/4,Rc3/8 Rc3/8,Rc1/2	24 VDC
	Master valve **PV5S-6-0** 	–	–	MAX. φ100	P/A/B R_1/R_2	Rc1/4,Rc3/8 Rc3/8	–
ISO size 2	Single valve **PV5G-8** Series 	DIN terminal box	Manifold **GMF2** Series 	MAX. φ160	P/A/B R_1/R_2	Rc3/8,Rc1/2,Rc3/4 Rc1/2,Rc3/4	100 VAC 110 VAC 200 VAC 220 VAC 12 VDC 24 VDC
	Single valve **PV5-8R** Series 	I/O connector			P/A/B R_1/R_2	Rc3/8,Rc1/2,Rc3/4 Rc1/2,Rc3/4	24 VDC
	Master valve **PV5S-8-0** 	–	–	MAX. φ160	P/A/B R_1/R_2	Rc3/8,Rc1/2,Rc3/4 Rc1/2,Rc3/4	–

Series variation

PV5G/PV5/GMF Series

Series/appearance				Position Number of solenoids JIS symbol	Valve performance		Voltage
Size	Connection	Single valve	Individual wiring manifold * The figure is an example of a DIN terminal box.		Cylinder bore size	Flow characteristics C [dm³/(s·bar)]	
ISO size 1	DIN terminal box	**PV5G-6**  Single unit ..... page 1438 Manifold ..... Page 1450	● Common exhaust method 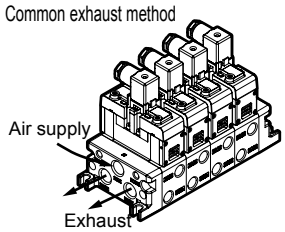 ● Individual exhaust method 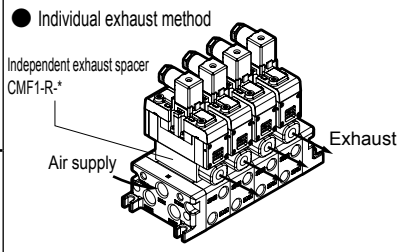 ● Individual supply method 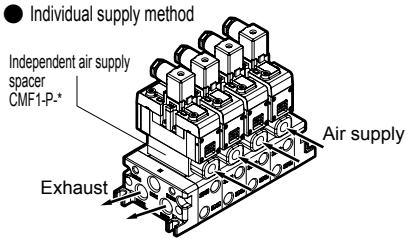 ● Common method 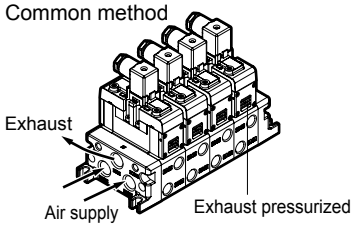 ● Different pressure supply method With this method of supplying both higher and lower pressure to a single manifold, a flow path cutoff plate (GM1-01) is inserted between the manifold blocks with different pressures. ● Individual supply/exhaust method Air supply and exhaust are processed individually by inserting an independent air supply spacer (CMF1-P-*) and an independent exhaust spacer (CMF1-R-*) between the manifold block and the valve body. ● Rear piping method When piping cannot be installed from the side, it is possible to install all or part of the piping of A/B ports from the bottom surface of the manifold.	● 2-position single 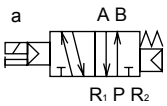 ● 2-position double 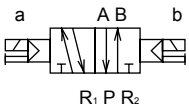 ● 3-position all ports closed 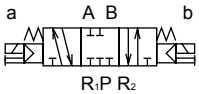 ● 3-position all ports closed (non-leaking) 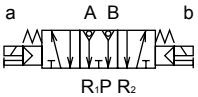 ● 3-position A/B/R connection  ● 3-position P/A/B connection  ● 2-position single (Exhaust pressurized) 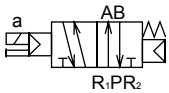 ● 2-position single (Exhaust pressurized) 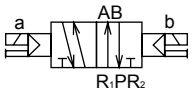	MAX. φ100	P→A/B 3.4 to 6.3 A/B→R1/R2 3.0 to 6.9 *1	100 VAC 200 VAC 12 VDC 24 VDC 110 VAC 220 VAC *2
	I/O connector	**PV5-6R** 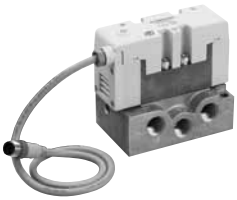 Single unit ..... page 1466 Manifold ..... page 1478					
ISO size 2	DIN terminal box	**PV5G-8**  Single unit ..... page 1444 Manifold ..... Page 1454			MAX. φ160	P→A/B 6.6 to 11.0 A/B→R1/R2 6.2 to 13.0 *1	100 VAC 200 VAC 12 VAC 24 VDC 110 VDC 220 VAC *2
	I/O connector	**PV5-8R** 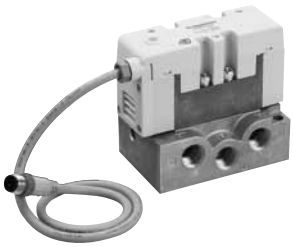 Single unit ..... page 1472 Manifold ..... Page 1482					

*1: Effective cross-sectional area "S" and sonic conductance "C" are converted as S ≈ 5.0 x C.
*2: The I/O connector is only available for 24 VDC.

ISO size	Size 1				Size 2			
	Single unit: PV5G-6, PV5-6R Series Manifold: GMF1 Series				Single unit: PV5G-8, PV5-8R Series Manifold: GMF2 Series			
Sub-plate	DIN terminal box Page 1438 I/O connector Page 1466				DIN terminal box Page 1444 I/O connector Page 1472			
 	Model No.	Connection	Port size		Model No.	Connection	Port size	
			P/A/B	R_1, R_2			P/A/B	R_1, R_2
	CB1-A02	Side piping	Rc1/4	Rc3/8	CB2-A03	Side piping	Rc3/8	Rc1/2
	CB1-A03		Rc3/8		CB2-A04		Rc1/2	
					CB2-A06		Rc3/4	Rc3/4
Manifold	DIN terminal box Page 1450 I/O connector Page 1478				DIN terminal box Page 1454 I/O connector Page 1482			
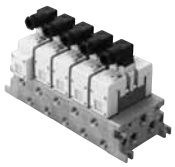 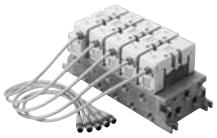	Model No.	Descriptions		Specifications	Model No.	Descriptions		Specifications
	GMF1	Station No.		1 station to 10 stations	GMF2	Station No.		1 station to 10 stations
		Piping connection	A/B Port	Rc1/4, 3/8		Piping connection	A/B Port	Rc3/8, 1/2
			P/R_1/R_2 port	Rc3/8, 1/2			P/R_1/R_2 port	Rc1/2, 3/4
		Option	Independent air supply spacer	CMF1-P-*		Option	Independent exhaust spacer	CMF2-P-*
			Independent exhaust spacer	CMF1-R-*			Independent exhaust spacer	CMF2-R-*
			Masking plate	CM1-00			Masking plate	CM2-00
			Spacer regulator	CMF1-SR-P/A/B			Spacer regulator	CMF2-SR-P/A/B
			Air pilot check valve	CMF1-PC			Air pilot check valve	CMF2-PC
	Manifold method (As an option, a GMFZ which is a combination of GMF1 and GMF2 is also available.)							
	1	Common exhaust method			1	Common exhaust method		
	2	Individual exhaust method			2	Individual exhaust method		
	3	Individual supply method			3	Individual supply method		
	4	Different pressure supply method			4	Different pressure supply method		
	5	Individual supply/exhaust method			5	Individual supply/exhaust method		
	6	Rear piping method			6	Rear piping method		

4GA/B
M4GA/B
MN4GA/B
4GA/B (mastr)
4GD/E
M4GD/E
MN4GD/E
4GA4/B4
MN3E MN4E
W4GA/B2
W4GB4
4TB
4L2-4/ LMF0
MN3S0 MN4S0
4SA/B0
4KA/B
4KA/B (mastr)
4F
4F (mastr)
PV5G GMF
PV5 GMF
PV5S-0
3QR 3QB
MV3QR
3MA/B0
3PA/B
P/M/B
NP/NAP/ NVP
4F*0EX
4F*0E
HMV HSV
2QV 3QV
SKH
PCD
Silencer
TotAirSys (Total Air)
TotAirSys (Gamma)
Ending

PV5G/GMF (DIN terminal box)

How to wire

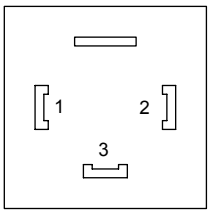

Pin No.	Name
1	a SOL
2	b SOL
3	COM

There is no specification of polarity when using a DC power supply.

Electric connection circuit diagram

Electrical connections (wiring method)

	Blank Without energization indicator lamp	N With surge suppressor and indicator lamp
Single	AC 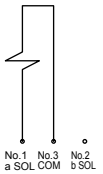	AC 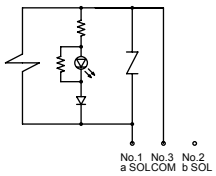
	DC 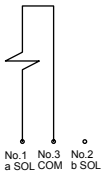	DC 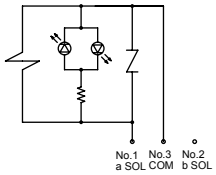
Double	AC 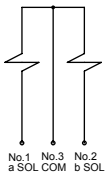	AC 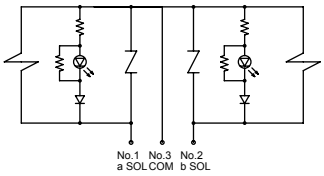
	DC 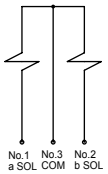	DC 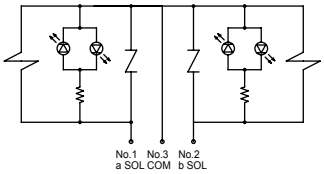

PV5/GMF (I/O connector)

How to wire

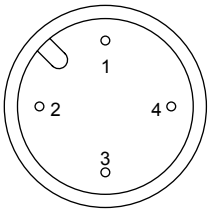

Pin No.	Name
1	COM(NPN)
2	b SOL
3	COM(PNP)
4	a SOL

Pin 2 will not be used when using a single type.

Electric connection circuit diagram

Electrical connections (wiring method)

Single	DC 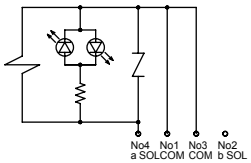
Double	DC 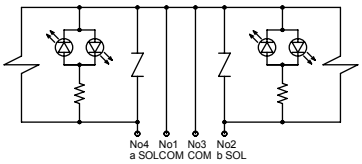

Note: Only available with a rated voltage of 24 VDC and with surge suppressor and indicator lamp.

PV5G/GMF
(DIN terminal box)

Pilot operated 5-port valve **ISO valve**

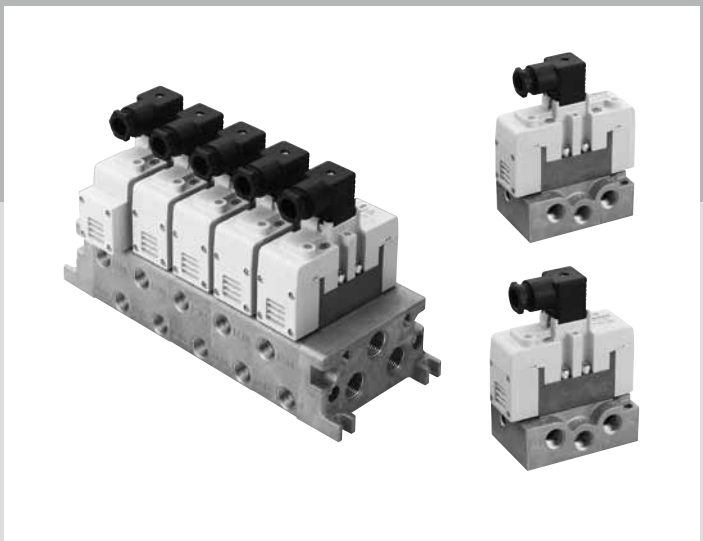

CONTENTS

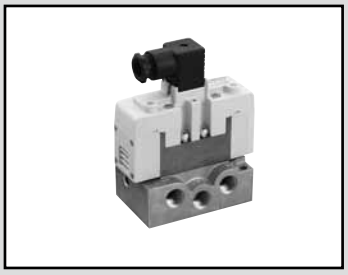

Single valve ISO size 1
DIN terminal box
Pilot operated 5-port valve ISO compliant valve

PV5G-6 Series

● Cylinder bore size: max. φ100

CE (applied to DC voltage) RoHS

JIS symbol

● 5-port valve

2-position single (FG-S)

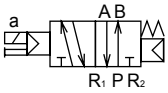

2-position double (FG-D)

3-position all ports closed (FHG)

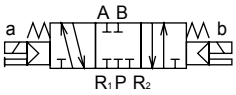

3-position all ports closed Non-leaking (FPG)

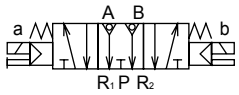

3-position A/B/R connection (FJG)

3-position P/A/B connection (FIG)

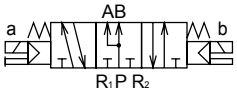

2-position single Exhaust pressurized (YZ-S)

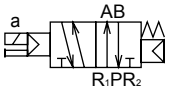

2-position double Exhaust pressurized (YZ-D)

Common specifications

Descriptions	Content
Valve and operation	Pilot operated soft spool valve
Working fluid	Compressed air
Max. working pressure MPa	1.0 (≈150 psi, 10 bar)
Min. working pressure MPa	0.15 (≈22 psi, 1.5 bar) 0.20 (≈29 psi, 2 bar) (3-position) *1
Proof pressure MPa	1.50 (≈220 psi, 15 bar)
Ambient temperature °C	-5 (23°F) to 60 (140°F) (no freezing)
Fluid temperature °C	5 (41°F) to 60 (140°F)
Lubrication	Not required
Degree of protection	Dust proof/jet proof (IP65 or equivalent)
Leakage cm^3/min (A, B→R port)	10 (ANR) or less 3-position all ports closed non-leaking type only 0.3 (ANR) or less *2
Vibration resistance m/s^2	50 or less
Shock resistance m/s^2	300 or less
Atmosphere	Cannot be used in corrosive gas environment.

*1: With YZ-S only, use with a working pressure of R1 > R2 ≥ 0.15 MPa.
*2: The initial value is listed.

Electrical specifications

Descriptions				Content
Rated voltage	V	AC		100(50/60 Hz) 110(50/60 Hz) 200(50/60 Hz) 220(50/60 Hz)
		DC		12,24
Voltage fluctuation range				±10%
Starting current	A	AC	100 V	0.056/0.044
			110 V	0.051/0.040
			200 V	0.034/0.026
			220 V	0.031/0.024
Holding current	A	AC	100 V	0.028/0.022
			110 V	0.025/0.020
			200 V	0.017/0.013
			220 V	0.015/0.012
		DC	12 V	0.083
			24 V	0.042
Power consumption	W	AC	100 V	1.8/1.4
			110 V	(1.8/1.5)
			200 V	2.1/1.6
			220 V	(2.2/1.7)
Values in ( ) are with lamp		DC	12 V	1(1.2)
			24 V	
Thermal class				B (molded coil)
Wiring method				Electrical plug connector

Individual specifications

Descriptions			PV5G-6
Port size *1			Rc1/4, Rc3/8
Response time ms *2	2-position	Single	30 (ON), 40 (OFF)
		Double	30
	3-position		30 (when ON), 50 (when neutral)
Weight kg *3	2-position	Single	0.40
		Double	0.44
	3-position	Other than non-leaking	0.48
		All ports closed non-leaking	1.14

*1: As G and NPT threads can also be used for piping port screws, contact CKD for details.
*2: The response time is the value with a working pressure of 0.5 MPa, no lubrication, and a DC power supply. It depends on the pressure and the lubricant quality.
*3: The weight listed is the weight without the sub-plate.

Flow characteristics

Model No.	Port size	Solenoid position	P→A/B		A/B→R1/R2	
			C[dm³/(s·bar)]	b	C[dm³/(s·bar)]	b
PV5G-6	Rc1/4	2-position single	6.1	0.28	6.7	0.20
		2-position double	6.1	0.28	6.7	0.20
		3-position all ports closed	5.2	0.32	5.6	0.30
		3-position A/B/R connection	5.1	0.32	6.9	0.16
		3-position P/A/B connection	6.3	0.28	5.9	0.28
		3-position all ports closed non-leaking	3.4	-	3.0	-

*1: Effective cross-sectional area S and sonic conductance C are converted as S ≈ 5.0 x C.

Coolant proof specifications

Can be selected with ”How to order” Item Ⓓ option “A” on page 1440.

4GA/B
M4GA/B
MN4GA/B
4GA/B (mastr)
4GD/E
M4GD/E
MN4GD/E
4GA4/B4
MN3E MN4E
W4GA/B2
W4GB4
4TB
4L2-4/ LMF0
MN3S0 MN4S0
4SA/B0
4KA/B
4KA/B (mastr)
4F
4F (mastr)
PV5G GMF
PV5 GMF
PV5S-0
3QR 3QB
MV3QR
3MA/B0
3PA/B
P/M/B
NP/NAP/ NVP
4F*0EX
4F*0E
HMV HSV
2QV 3QV
SKH
PCD
Silencer
TotAirSys (Total Air)
TotAirSys (Gamma)
Ending

How to order DIN terminal box

● ISO Size 1

PV5G - 6 - FG-S - 3 - N ( ) - A03

- PV5G: Model No.
- 6: ISO size 1
- FG-S: Ⓐ Solenoid position
- 3: Ⓑ Voltage
- N: Ⓒ Surge suppressor/lamp
- ( ): Ⓓ Option
- A03: Ⓔ With/without sub-plate and port size

Code	Content		Model No. PV5G-6
Ⓐ Solenoid position			
FG-S	P pressurized	2-position single	●
FG-D		2-position double	●
FHG-D		3-position all ports closed	●
FJG-D		3-position ABR connection	●
FIG-D		3-position PAB connection	●
FPG-D		3-position all ports closed non-leaking	●
YZ-S	Exhaust pressurized	2-position single	●
YZ-D		2-position double	●
Ⓑ Voltage			
1	100 VAC		●
2	200 VAC		●
3	24 VDC		●
4	12 VDC		●
5	110 VAC		●
6	220 VAC		●
Ⓒ Surge suppressor/lamp			
Blank	None		●
N	With surge suppressor/lamp *1		●
Ⓓ Option			
Blank	None		●
A	Coolant proof		●
Ⓔ With/without sub-plate and port size			
Blank	Without sub-plate		●
A02	Side piping (Rc1/4 (Rc3/8 for R port only))		●
A03	Side piping (Rc3/8)		●

⚠ Precautions for model No. selection

*1: Refer to page 1436 for the circuit diagram with a surge suppressor/lamp.

[Example of model No.]

PV5G-6-FG-S-3-N-A03

Model: PV5G/ISO size 1 (DIN terminal box)

Ⓐ Solenoid position	: P pressurized type 2-position Single solenoid
Ⓑ Voltage	: 24 VDC
Ⓒ Surge suppressor/indicator lamp	: With surge suppressor and indicator lamp
Ⓓ Option	: None
Ⓔ Sub-plate port size	: Side piping (Rc3/8)

ISO size 1 sub-plate specifications and how to order

CB1 - A02

- A02: Ⓐ Piping connection method

Code	Type	P/A/B port	R1/R2 port	Weight (kg)
Ⓐ Piping connection method				
A02	Side piping	Rc1/4	Rc3/8	0.27
A03		Rc3/8		

Internal structure and parts list: DIN terminal box

PV5G-6-FG-S
● 2-position single

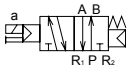

PV5G-6-YZ-S
● 2-position single
Exhaust pressurized

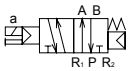

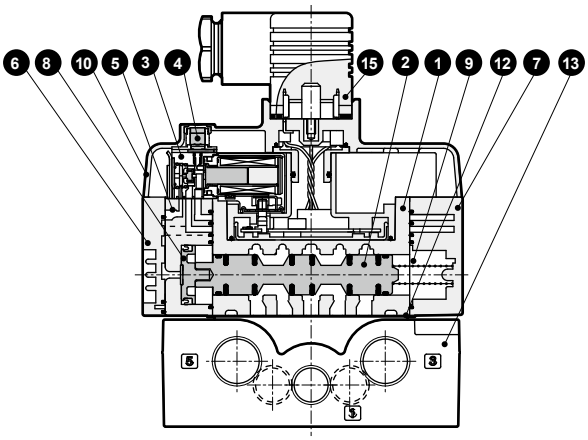

PV5G-6-FG-D
● 2-position double

PV5G-6-YZ-D
● 2-position double
Exhaust pressurized

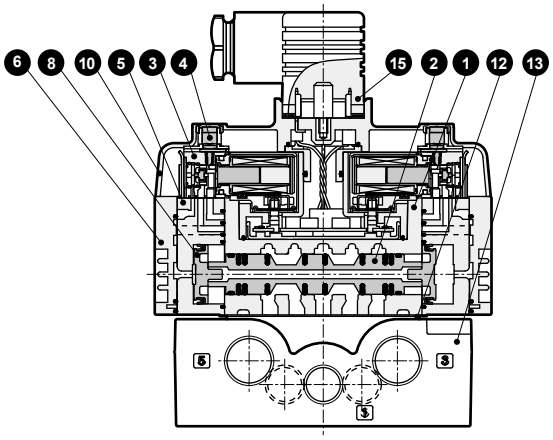

PV5G-6-FHG-D
● 3-position all ports closed

PV5G-6-FJG-D
● 3-position A/B/R connection

PV5G-6-FIG-D
● 3-position P/A/B connection

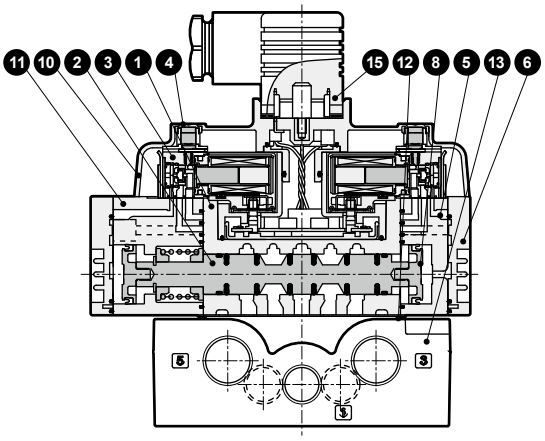

PV5G-6-FPG-D
● 3-position all ports closed
Non-leaking type

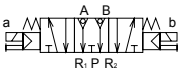

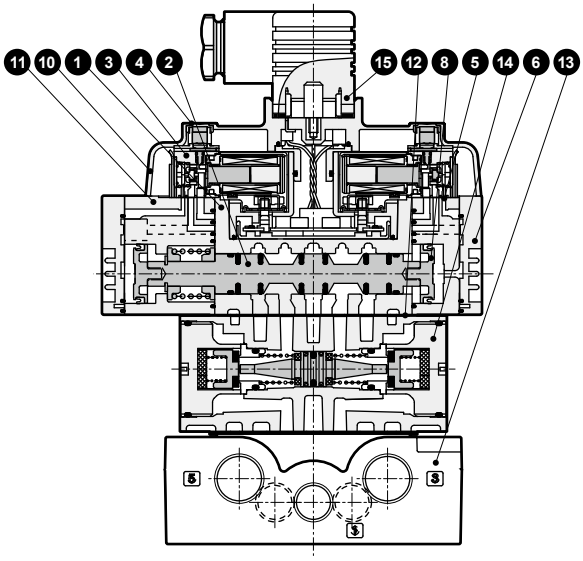

Main parts list

No.	Part name	Material	No.	Part name	Material
1	Body	Aluminum alloy die-casting	9	Spring S	-
2	Spool assembly	-	10	Wiring cover	Resin
3	Pilot valve	-	11	Pilot valve assembly for 3-position	Resin
4	Manual override	-	12	Gasket	-
5	Pilot valve assembly for double	Resin	13	Sub-plate	Aluminum alloy die-casting
6	Cap D	Resin	14	Air pilot check valve	-
7	Cap S	Resin	15	DIN terminal box	-
8	Piston D assembly	-			

4GA/B
M4GA/B
MN4GA/B
4GA/B (mastr)
4GD/E
M4GD/E
MN4GD/E
4GA4/B4
MN3E MN4E
W4GA/B2
W4GB4
4TB
4L2-4/ LMF0
MN3S0 MN4S0
4SA/B0
4KA/B
4KA/B (mastr)
4F
4F (mastr)
PV5G GMF
PV5 GMF
PV5S-0
3QR 3QB
MV3QR
3MA/B0
3PA/B
P/M/B
NP/NAP/ NVP
4F*0EX
4F*0E
HMV HSV
2QV 3QV
SKH
PCD
Silencer
TotAirSys (Total Air)
TotAirSys (Gamma)
Ending

Dimensions: DIN terminal box (out sub-plate)

PV5G-6-FG-S-*
PV5G-6-YZ-S-*

● 2-position single

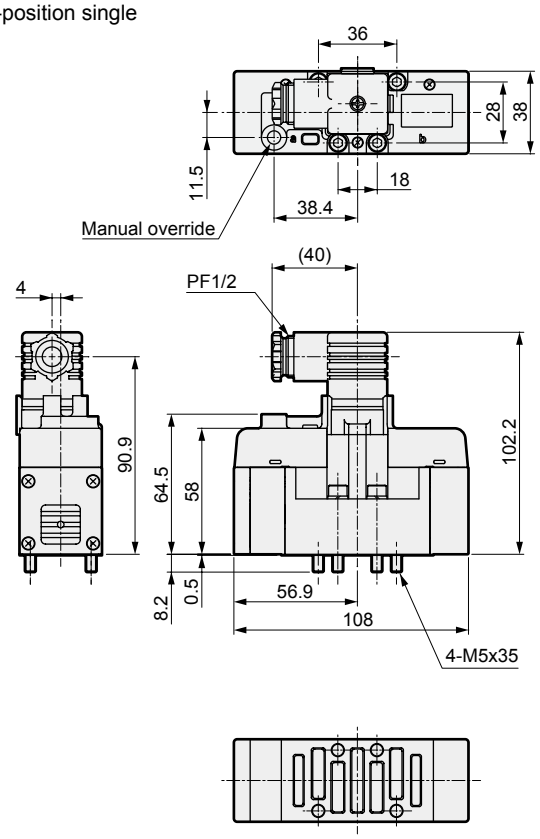

PV5G-6-FG-D-*
PV5G-6-YZ-D-*

● 2-position double

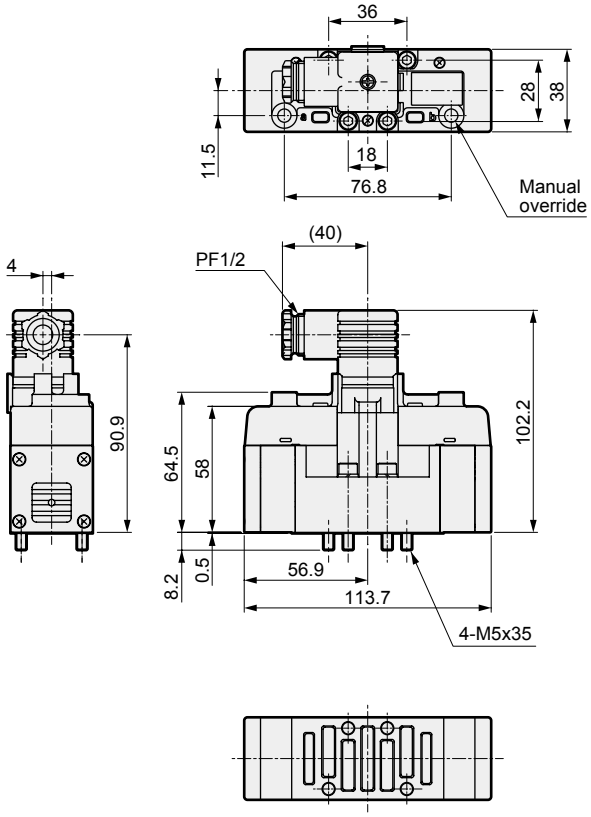

PV5G-6-FHG-D-*
PV5G-6-FJG-D-*
PV5G-6-FIG-D-*

● 3-position

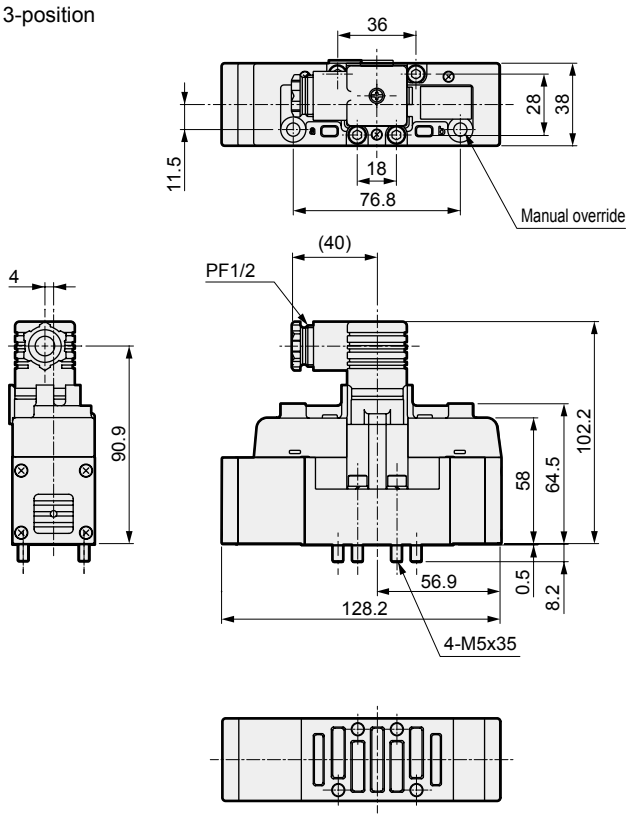

PV5G-6-FPG-D-*

● 3-position/non-leaking

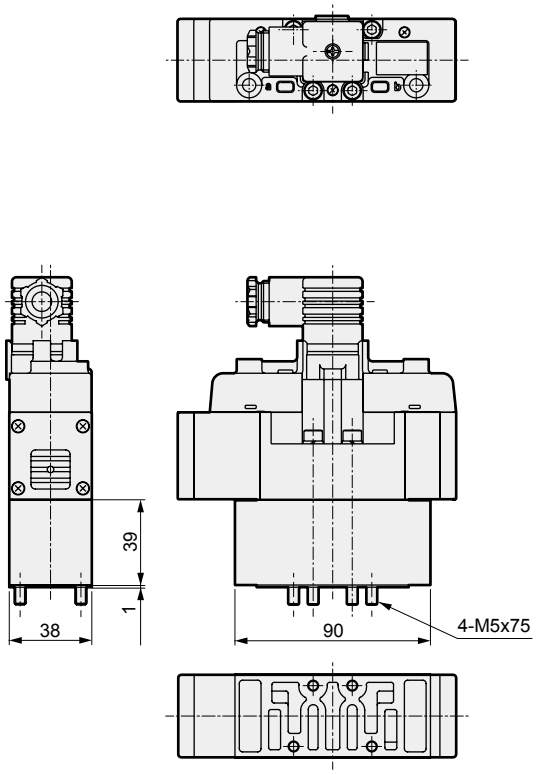

Dimensions: DIN terminal box (with sub-plate)

PV5G-6-FG-S-*-*
PV5G-6-YZ-S-*-*

● 2-position single

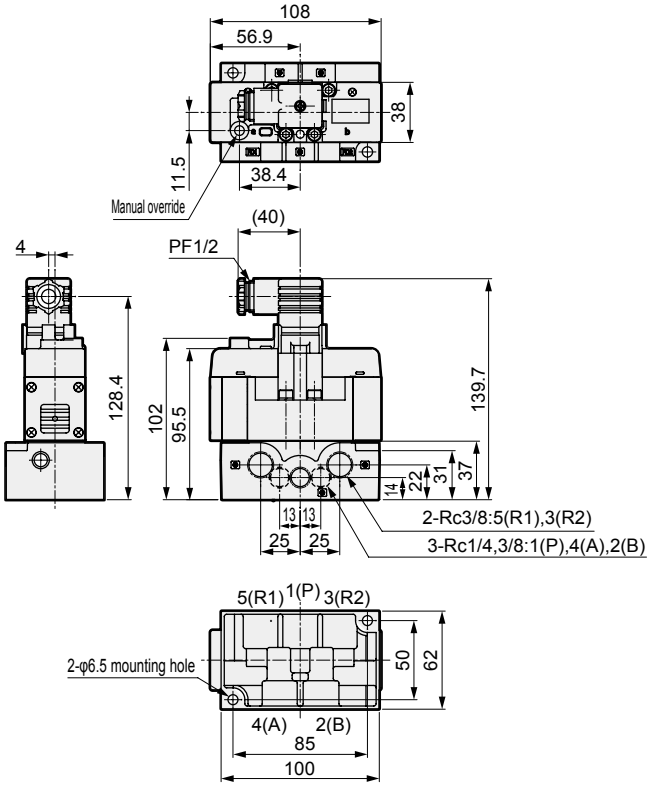

PV5G-6-FG-D-*-*
PV5G-6-YZ-D-*-*

● 2-position double

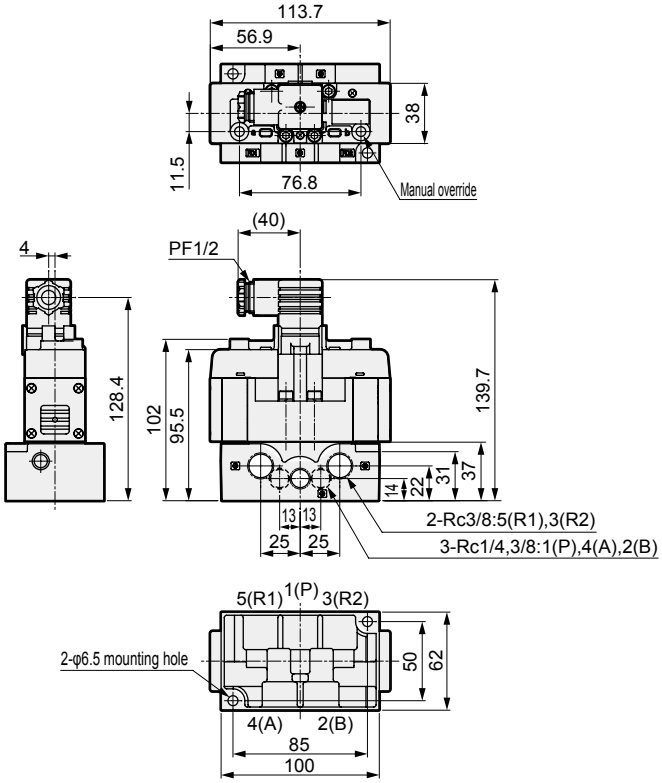

PV5G-6-FHG-D-*-*
PV5G-6-FJG-D-*-*
PV5G-6-FIG-D-*-*

● 3-position

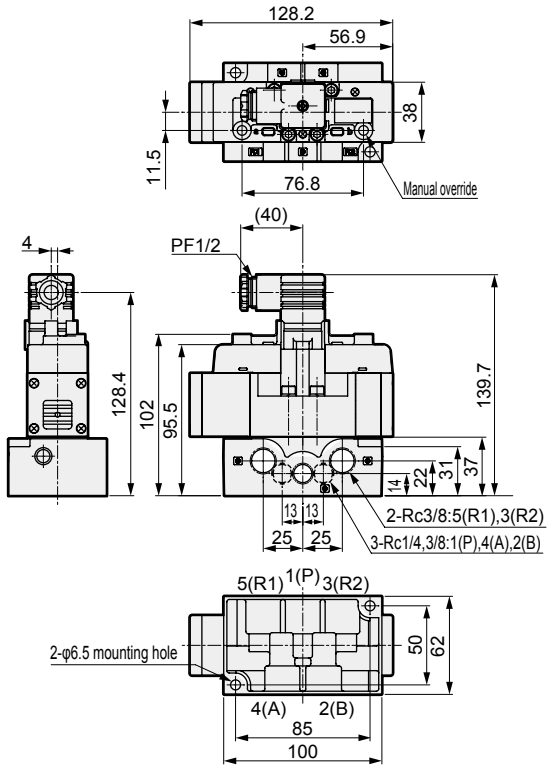

● Sub-plate dimensions

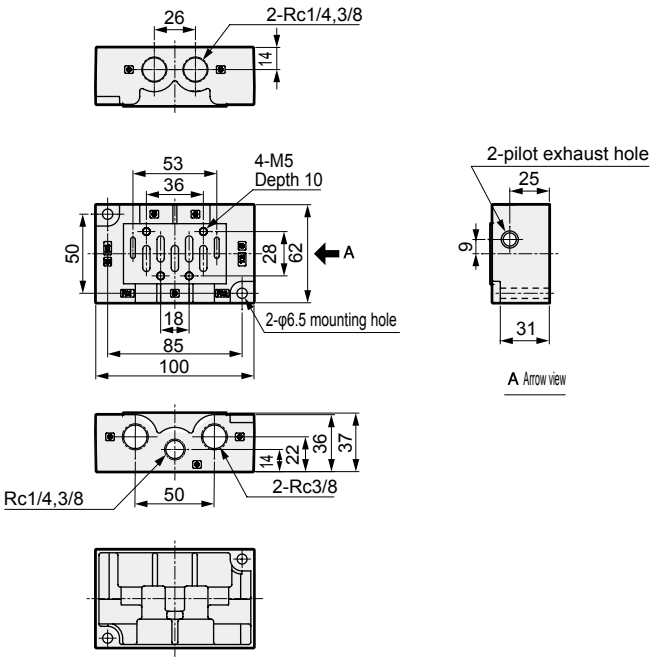

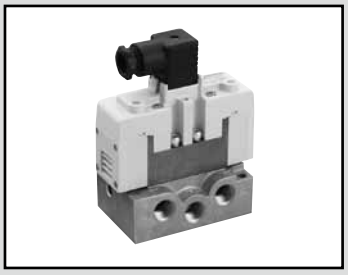

Single valve ISO size 2
DIN terminal box
Pilot operated 5-port valve ISO compliant valve

PV5G-8 Series

● Cylinder bore size: max. φ160

CE (applied to DC voltage type) RoHS

JIS symbol

● 5-port valve

2-position single (FG-S)

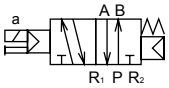

2-position double (FG-D)

3-position all ports closed (FHG)

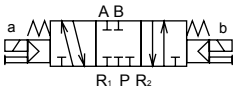

3-position all ports closed Non-leaking (FPG)

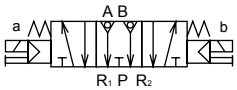

3-position A/B/R connection (FJG)

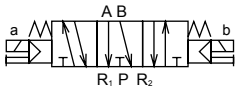

3-position P/A/B connection (FIG)

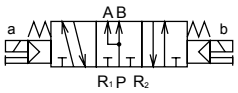

2-position single Exhaust pressurized (YZ-S)

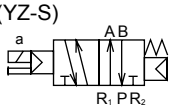

2-position double Exhaust pressurized (YZ-D)

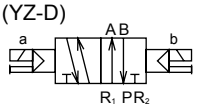

Common specifications

Descriptions	Content
Valve and operation	Pilot operated soft spool valve
Working fluid	Compressed air
Max. working pressure MPa	1.0
Min. working pressure MPa	0.15 0.20 (3-position) *1
Proof pressure MPa	1.50
Ambient temperature °C	-5 to 60 (no freezing)
Fluid temperature °C	5 to 60
Lubrication	Not required
Degree of protection	Dust proof/jet proof (IP65 or equivalent)
Leakage cm^3/min (A, B→R port)	10 (ANR) or less 3-position all ports closed non-leaking only 0.3 (ANR) or less *2
Vibration resistance m/s^2	50 or less
Shock resistance m/s^2	300 or less
Atmosphere	Cannot be used in corrosive gas environment.

*1: With YZ-S only, use the unit with a working pressure of R1 > R2 ≥ 0.15 MPa.
*2: The initial value is listed.

Electrical specifications

Descriptions				Content
Rated voltage	V	AC		100(50/60 Hz) 110(50/60 Hz) 200(50/60 Hz) 220(50/60 Hz)
		DC		12,24
Voltage fluctuation range				±10%
Starting current	A	AC	100 V	0.056/0.044
			110 V	0.051/0.040
			200 V	0.034/0.026
			220 V	0.031/0.024
Holding current	A	AC	100 V	0.028/0.022
			110 V	0.025/0.020
			200 V	0.017/0.013
			220 V	0.015/0.012
		DC	12 V	0.083
			24 V	0.042
Power consumption	W	AC	100 V	1.8/1.4
			110 V	(1.8/1.5)
			200 V	2.1/1.6
			220 V	(2.2/1.7)
Values in ( ) are with lamp		DC	12 V	1(1.2)
			24 V	
Thermal class				B (molded coil)
Wiring method				Electrical plug connector

Individual specifications

Descriptions			PV5G-8
Port size *1			Rc3/8, Rc1/2, Rc3/4
Response time ms *2	2-position	Single	40 (ON), 60 (OFF)
		Double	40
	3-position		40 (when ON), 60 (when neutral)
Weight kg *3	2-position	Single	0.63
		Double	0.67
	3-position	Other than non-leaking	0.70
		All ports closed non-leaking type	1.35

*1: As G and NPT threads can also be used for piping port screws, contact CKD for details.
*2: The response time is the value with a working pressure of 0.5 MPa, no lubrication, and a DC power supply. It depends on the pressure and the lubricant quality.
*3: The weight listed is the weight without the sub-plate.

Flow characteristics

Model No.	Port size	Solenoid position	P→A/B		A/B→R1/R2	
			C[dm³/(s·bar)]	b	C[dm³/(s·bar)]	b
PV5G-8	Rc3/8	2-position single	10.7	0.17	13.0	0.19
		2-position double	10.7	0.17	13.0	0.19
		3-position all ports closed	10.0	0.16	11.0	0.25
		3-position A/B/R connection	9.9	0.14	13.0	0.16
		3-position P/A/B connection	11.0	0.12	12.0	0.21
		3-position all ports closed non-leaking	6.6	-	6.2	-

*1: Effective cross-sectional area S and sonic conductance C are converted as S ≈ 5.0 x C.

Coolant proof specifications

Select the option “A” of item Ⓓ in How to order on page 1446.

4GA/B
M4GA/B
MN4GA/B
4GA/B (mastr)
4GD/E
M4GD/E
MN4GD/E
4GA4/B4
MN3E MN4E
W4GA/B2
W4GB4
4TB
4L2-4/ LMF0
MN3S0 MN4S0
4SA/B0
4KA/B
4KA/B (mastr)
4F
4F (mastr)
PV5G GMF
PV5 GMF
PV5S-0
3QR 3QB
MV3QR
3MA/B0
3PA/B
P/M/B
NP/NAP/ NVP
4F*0EX
4F*0E
HMV HSV
2QV 3QV
SKH
PCD
Silencer
TotAirSys (Total Air)
TotAirSys (Gamma)
Ending

How to order DIN terminal box

● ISO size 2

PV5G - 8 - FG-S - 3 - N ◯ - A03

- PV5G: Model No.
- 8: ISO size 2
- FG-S: Ⓐ Solenoid position
- 3: Ⓑ Voltage
- N: Ⓒ Surge suppressor/lamp
- ◯: Ⓓ Option
- A03: Ⓔ With/without sub-plate and port size

Code	Content		Model No. PV5G-8
Ⓐ Solenoid position			
FG-S	P pressurized	2-position single	●
FG-D		2-position double	●
FHG-D		3-position all ports closed	●
FJG-D		3-position ABR connection	●
FIG-D		3-position PAB connection	●
FPG-D		3-position all ports closed non-leaking	●
YZ-S	Exhaust pressurized	2-position single	●
YZ-D		2-position double	●
Ⓑ Voltage			
1	100 VAC		●
2	200 VAC		●
3	24 VDC		●
4	12 VDC		●
5	110 VAC		●
6	220 VAC		●
Ⓒ Surge suppressor/lamp			
Blank	None		●
N	With surge suppressor/lamp *1		●
Ⓓ Option			
Blank	None		●
A	Coolant proof		●
Ⓔ With/without sub-plate and port size			
Blank	Without sub-plate		●
A03	Side piping Rc3/8 (Rc1/2 for R port only)		●
A04	Side piping (Rc1/2)		●
A06	Side piping (Rc3/4)		●

⚠ Precautions for model No. selection

*1: Refer to page 1436 for the circuit diagram with a surge suppressor/ lamp.

[Example of model No.]

PV5G-8-FG-S-3-N-A03

Model: PV5G/ISO size 2 (DIN terminal box)

Ⓐ Solenoid position	: P pressurized 2-position Single solenoid
Ⓑ Voltage	: 24 VDC
Ⓒ Surge suppressor/lamp	: With surge suppressor and indicator lamp
Ⓓ Option	: None
Ⓔ Sub-plate port size	: Side piping (Rc3/8) R port Rc1/2

ISO size 2 sub-plate specifications and how to order

CB2 - A03

- A03: Ⓐ Piping connection method

Code	Type	P/A/B port	R1/R2 port	Weight (kg)
Ⓐ Piping connection method				
A03	Side piping	Rc3/8	Rc1/2	0.49
A04		Rc1/2		
A06		Rc3/4	Rc3/4	1.40

Internal structure and parts list: DIN terminal box

PV5G-8-FG-S

● 2-position single

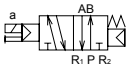

PV5G-8-FG-D

● 2-position double

PV5G-8-YZ-S

● 2-position single
Exhaust pressurized

PV5G-8-YZ-D

● 2-position double
Exhaust pressurized

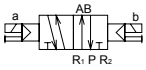

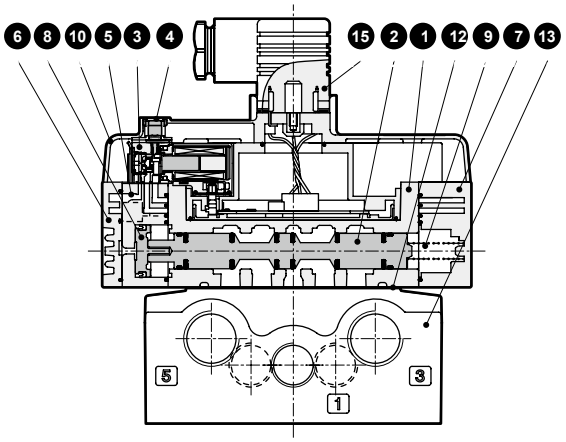

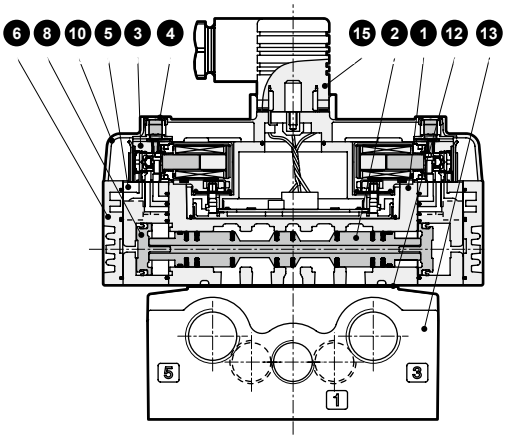

PV5G-8-FHG-D

● 3-position all ports closed

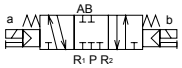

PV5G-8-FPG-D

● 3-position all ports closed
non-leaking

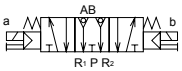

PV5G-8-FJG-D

● 3-position A/B/R connection

PV5G-8-FIG-D

● 3-position P/A/B connection

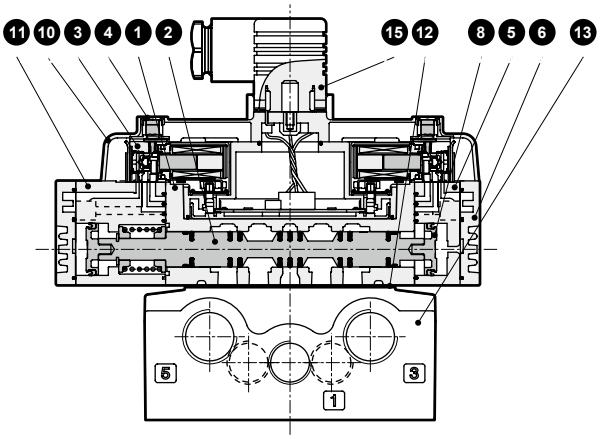

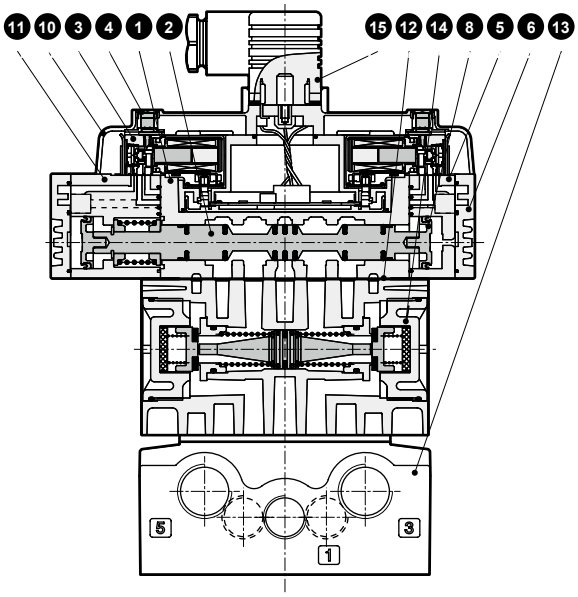

Main parts list

No.	Part name	Material	No.	Part name	Material
1	Body	Aluminum alloy die-casting	9	Spring S	-
2	Spool assembly	-	10	Wiring cover	Resin
3	Pilot valve	-	11	Pilot valve assembly for 3-position	Resin
4	Manual override	-	12	Gasket	-
5	Pilot valve assembly for double	Resin	13	Sub-plate	Aluminum alloy die-casting
6	Cap D	Resin	14	Air pilot check valve	-
7	Cap S	Resin	15	DIN terminal box	-
8	Piston D assembly	-			

Dimensions: DIN terminal box (without sub-plate)

PV5G-8-FG-S-*
PV5G-8-YZ-S-*

● 2-position single

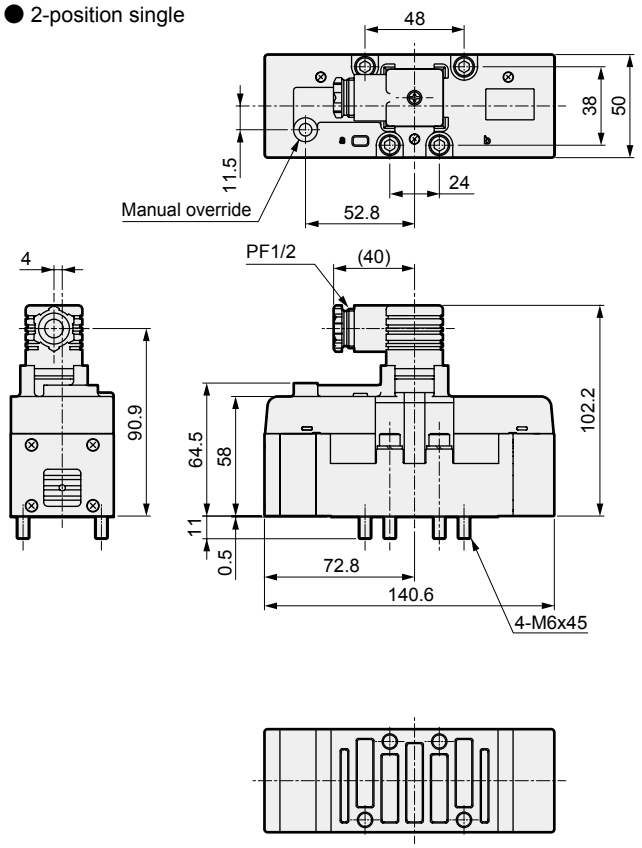

PV5G-8-FG-D-*
PV5G-8-YZ-D-*

● 2-position double

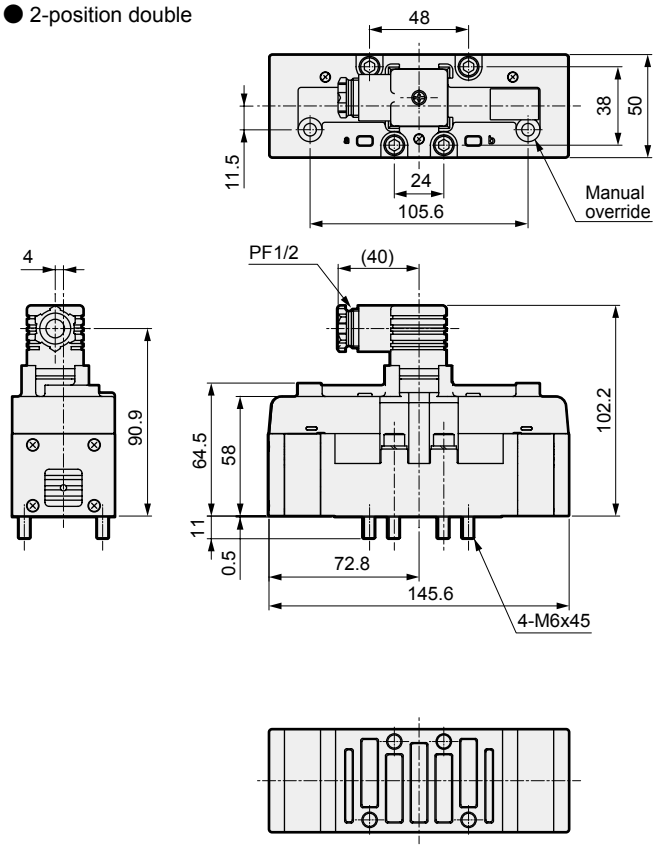

PV5G-8-FHG-D-*
PV5G-8-FJG-D-*
PV5G-8-FIG-D-*

● 3-position

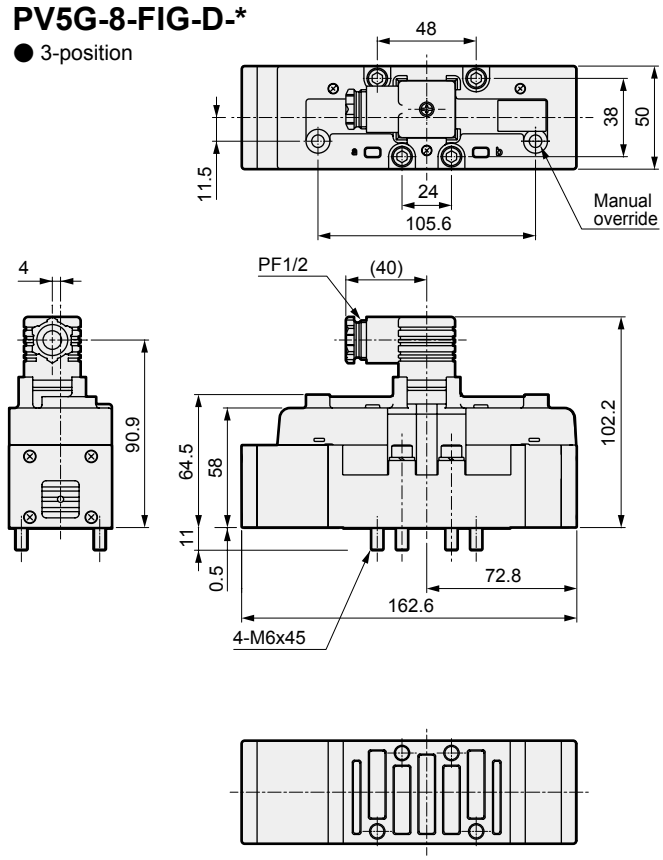

PV5G-8-FPG-D-*

● 3-position/non-leaking

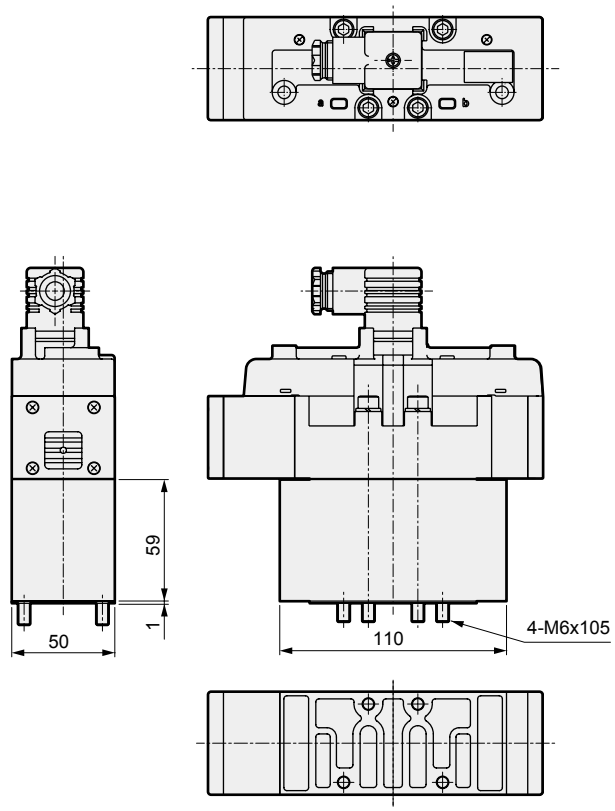

Dimensions: DIN terminal box (with sub-plate)

PV5G-8-FG-S-*-*
PV5G-8-YZ-S-*-*

● 2-position single

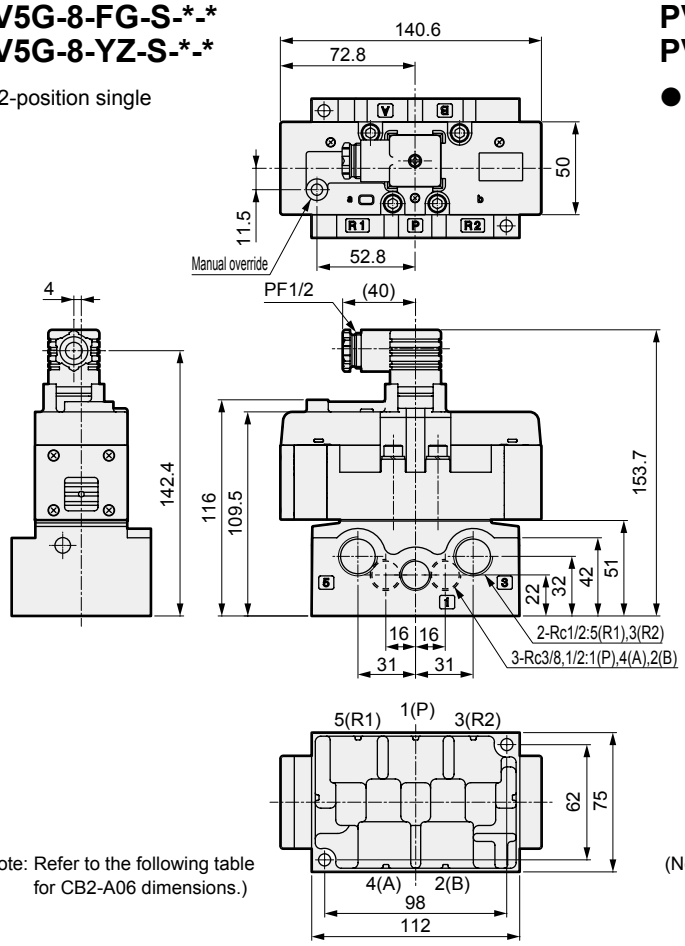

(Note: Refer to the following table for CB2-A06 dimensions.)

PV5G-8-FG-D-*-*
PV5G-8-YZ-D-*-*

● 2-position double

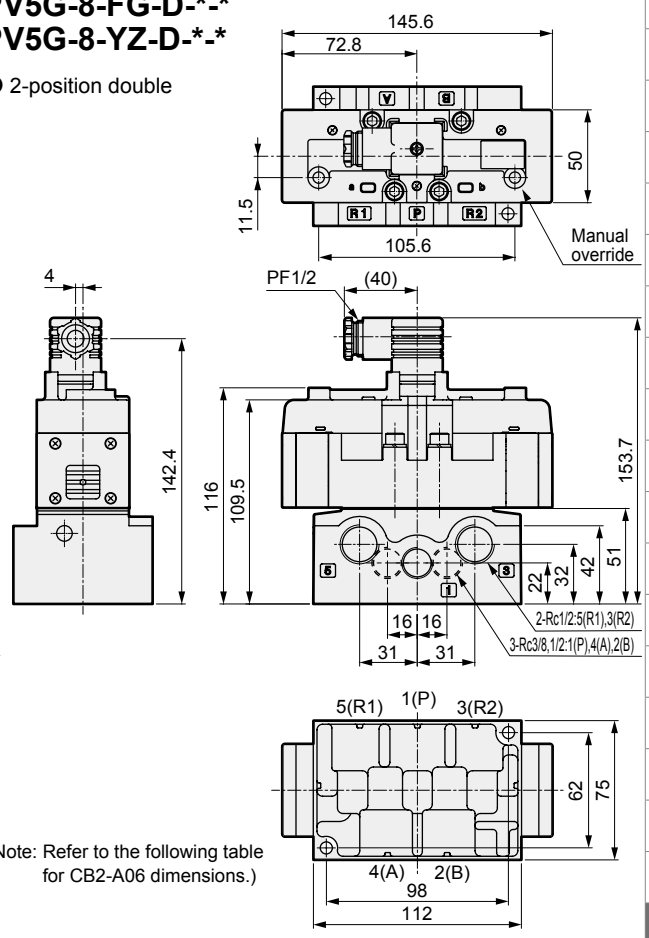

(Note: Refer to the following table for CB2-A06 dimensions.)

PV5G-8-FHG-D-*-*
PV5G-8-FJG-D-*-*
PV5G-8-FIG-D-*-*

● 3-position

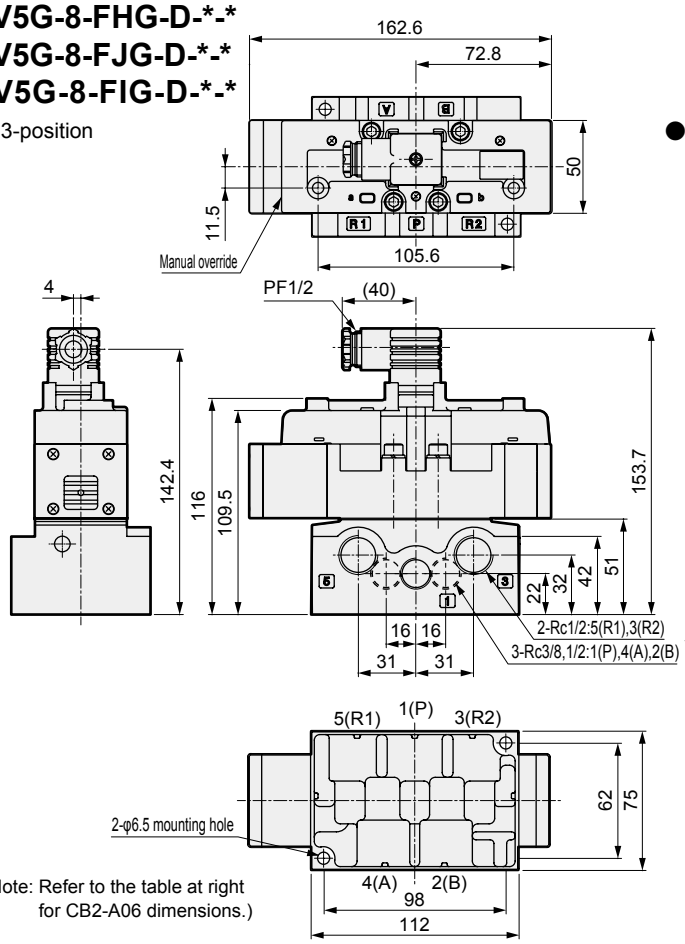

(Note: Refer to the table at right for CB2-A06 dimensions.)

● Sub-plate dimensions (CB2-*)

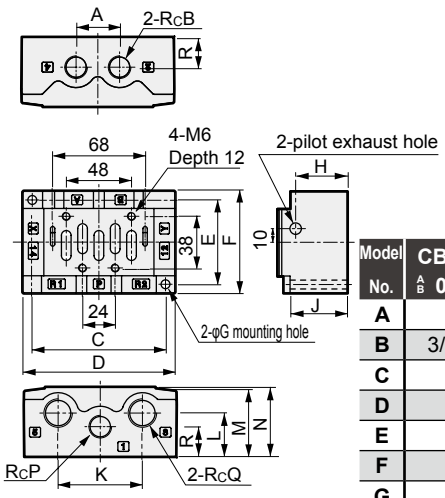

Model No.	CB2-A/B 03	CB2-A/B 04	CB2-A/B 06
A	32		40
B	3/8	1/2	3/4
C	98		128
D	112		142
E	62		72
F	75		86
G	6.5		7.5
H	38		53
J	42		55
K	62		84
L	32		42
M	50		62
N	51		63
P	3/8	1/2	3/4
Q	1/2		3/4
R	22		30

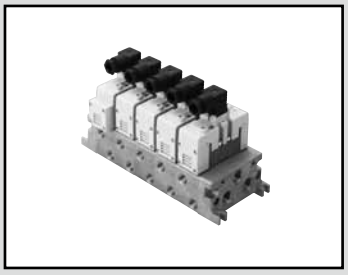

Individual wiring manifold ISO size 1
DIN terminal box
Pilot operated 5-port valve ISO compliant valve

GMF1 Series

● Cylinder bore size: max. φ100

RoHS

Common specifications

Descriptions	Content
Manifold method	Manifold integrated
Manifold	Common supply/common exhaust Common supply/individual exhaust Individual supply/common exhaust Individual supply/individual exhaust Different pressure supply
Station No.	1 to 10 stations
Valve and operation	Pilot operated soft spool valve
Working fluid	Compressed air
Max. working pressure MPa	1.0 (≈150 psi, 10 bar)
Min. working pressure MPa	0.15 (≈22 psi, 1.5 bar) 0.20 (≈29 psi, 2 bar) (3-position) *1
Proof pressure MPa	1.50 (≈220 psi, 15 bar)
Ambient temperature °C	-5 (23°F) to 60 (140°F) (no freezing)
Fluid temperature °C	5 (41°F) to 60 (140°F)
Lubrication	Not required
Degree of protection	Dust proof/jet proof (IP65 or equivalent)
Leakage (A, B→R port) cm^3/min	10 (ANR) or less 3-position all ports closed non-leaking only 0.3 (ANR) or less *2
Vibration resistance m/s^2	50 or less
Shock resistance m/s^2	300 or less
Atmosphere	Cannot be used in corrosive gas environment.

*1: With YZ-S only, use with a working pressure of R1 > R2 ≥ 0.15 MPa.
*2: The initial value is listed.

Electrical specifications

Descriptions				Content
Rated voltage V	AC			100(50/60 Hz) 110(50/60 Hz) 200(50/60 Hz) 220(50/60 Hz)
	DC			12,24
Voltage fluctuation range				±10%
Starting current A	AC	100 V		0.056/0.044
		110 V		0.051/0.040
		200 V		0.034/0.026
		220 V		0.031/0.024
Holding current A	AC	100 V		0.028/0.022
		110 V		0.025/0.020
		200 V		0.017/0.013
		220 V		0.015/0.012
	DC	12 V		0.083
		24 V		0.042
Power consumption W	AC	100 V		1.8/1.4
		110 V		(1.8/1.5)
		200 V		2.1/1.6
		220 V		(2.2/1.7)
Values in ( ) are with lamp	DC	12 V		1(1.2)
		24 V		
Thermal class				B (molded coil)
Wiring method				Electrical plug connector

Individual specifications

Descriptions			GMF1
Port size *1	P/R1/R2 port		Rc3/8, Rc1/2
	A/B port		Rc1/4, Rc3/8
Response time *2 ms	2-position	Single	30 (ON), 40 (OFF)
		Double	30
	3-position		30 (when ON), 50 (when neutral)

*1: As G and NPT threads can also be used for piping port screws, contact CKD for details.
*2: The response time is the value with a working pressure of 0.5 MPa, no lubrication, and a DC power supply.
It depends on the pressure and the lubricant quality.

Weight

Manifold base	Station No.	1	2	3	4	5	6	7	8	9	10
(kg)		1.04	1.50	1.95	2.40	2.85	3.30	3.75	4.20	4.65	5.10
Silencer box	Model No.	SB									
Added to manifold base assembly (kg)		0.13									
Spacer	Model No.	P		R		SR		PC			
(kg)		0.22		0.22		0.64		0.25			

Flow characteristics

Model No.	Port size	Solenoid position	P→A/B C[dm^3/(s·bar)]	P→A/B b	A/B→R1/R2 C[dm^3/(s·bar)]	A/B→R1/R2 b
GMF1	Rc1/4	2-position single	4.8	0.25	5.2	0.26
		2-position double	4.8	0.25	5.2	0.26
		3-position all ports closed	4.4	0.27	4.7	0.27
		3-position A/B/R connection	4.4	0.25	5.3	0.25
		3-position P/A/B connection	4.8	0.27	4.7	0.27
		3-position all ports closed non-leaking	3.2	-	2.8	-

*1: Effective cross-sectional area S and sonic conductance C are converted as S ≈ 5.0 x C.

How to order DIN terminal box

● ISO Size 1

GMF 1 5 - 02 L - HY1 B DU - SB F - ( ) ( )

- Model No.
- Ⓐ Station No.
- Ⓑ A/B port size *1
- Ⓒ A/B port position *2
- Ⓓ P/R port size
- Ⓔ P/R port position *3 *4
- Ⓕ HY configuration
- Ⓖ Silencer box
- Ⓗ Option
- Quantity of port size 02 of A/B port
- Quantity of port size 03 of A/B port

Code	Content	Model No. GMF1
Ⓐ Station No.		
1	1 station	●
to	to	●
10	10 stations	●
Ⓑ A/B port size		
02	Rc 1/4	●
03	Rc 3/8	●
HX1	Rc 1/4 and Rc 3/8 mixture	●
Ⓒ A/B port position		
Blank	Right	●
L	Left and right sides (select position with manifold specifications)	●
H	Left	●
Z	Rear side	●
T	Free selection (plug attached) (rear side not available)	●
Ⓓ P/R port size		
03	Rc3/8	●
04	Rc1/2	●
HY1	Rc3/8 and Rc1/2 mixture	●
Ⓔ P/R port position		
B	Top and bottom sides	●
D	Bottom side	●
U	Top side	●
E	P on top, R on bottom	●
F	P on bottom, R on top	●
T	Free selection (plug attached)	●
Ⓕ HY configuration		
Blank	When other than HY1 is selected with Ⓓ	●
DU	Rc 3/8 on bottom, Rc 1/2 on top	●
UD	Rc 3/8 on top, Rc 1/2 on bottom	●
Ⓖ Silencer box		
Blank	None	●
SB	Yes (D side installation)	●
Ⓗ Option		
Blank	None	●
F	P/A/B port filter integrated	●

⚠ Precautions for model No. selection

*1: HX is a mixture of bore sizes. Contact CKD for details.
*2: The instructions of Ⓒ indicate the port positions. Those other than the instructions will all be plugs.
*3: The instructions of Ⓔ indicate the port positions. The opposite side of the instructions will be plugs.
*4: When Ⓖ is with silencer box, this will be position selection for the P-port which can be selected from B, D, U, and T.
The R port is assembled with a plug for both the top and bottom.

[Example of model No.]
GMF15-02L-HY1BDU-SBF

Model: Manifold ISO size 1

Ⓐ Station No. : 5 stations
Ⓑ Ⓒ A/B port : Rc1/4 (left and right both sides piping)
Ⓓ Ⓔ Ⓕ P/R port : Rc3/8 and Rc1/2 mixture (Rc3/8 for bottom side piping and Rc1/2 for top side piping)
Ⓖ Silencer box : Yes (D side installation)
Ⓗ Option : P/A/B-port filter integrated

The valve body must be prepared separately. For how to order valves, refer to page 1440. For arrangement of manifolds with valve bodies, **the manifold specifications sheet** on page 1462 **will be necessary** in addition to each model No.

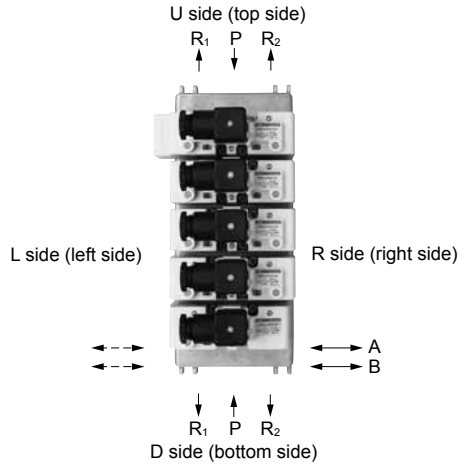

Dimensions: DIN terminal box

4GA/B
M4GA/B
MN4GA/B
4GA/B (mastr)
4GD/E
M4GD/E
MN4GD/E
4GA4/B4
MN3E MN4E
W4GA/B2
W4GB4
4TB
4L2-4/ LMF0
MN3S0 MN4S0
4SA/B0
4KA/B
4KA/B (mastr)
4F
4F (mastr)
PV5G GMF
PV5 GMF
PV5S-0
3QR 3QB
MV3QR
3MA/B0
3PA/B
P/M/B
NP/NAP/ NVP
4F*0EX
4F*0E
HMV HSV
2QV 3QV
SKH
PCD
Silencer
TotAirSys (Total Air)
TotAirSys (Gamma)
Ending

GMF1

● Common exhaust

P/R port size	A	B
Rc 3/8	18.4	23.5
Rc 1/2	22.4	22.5

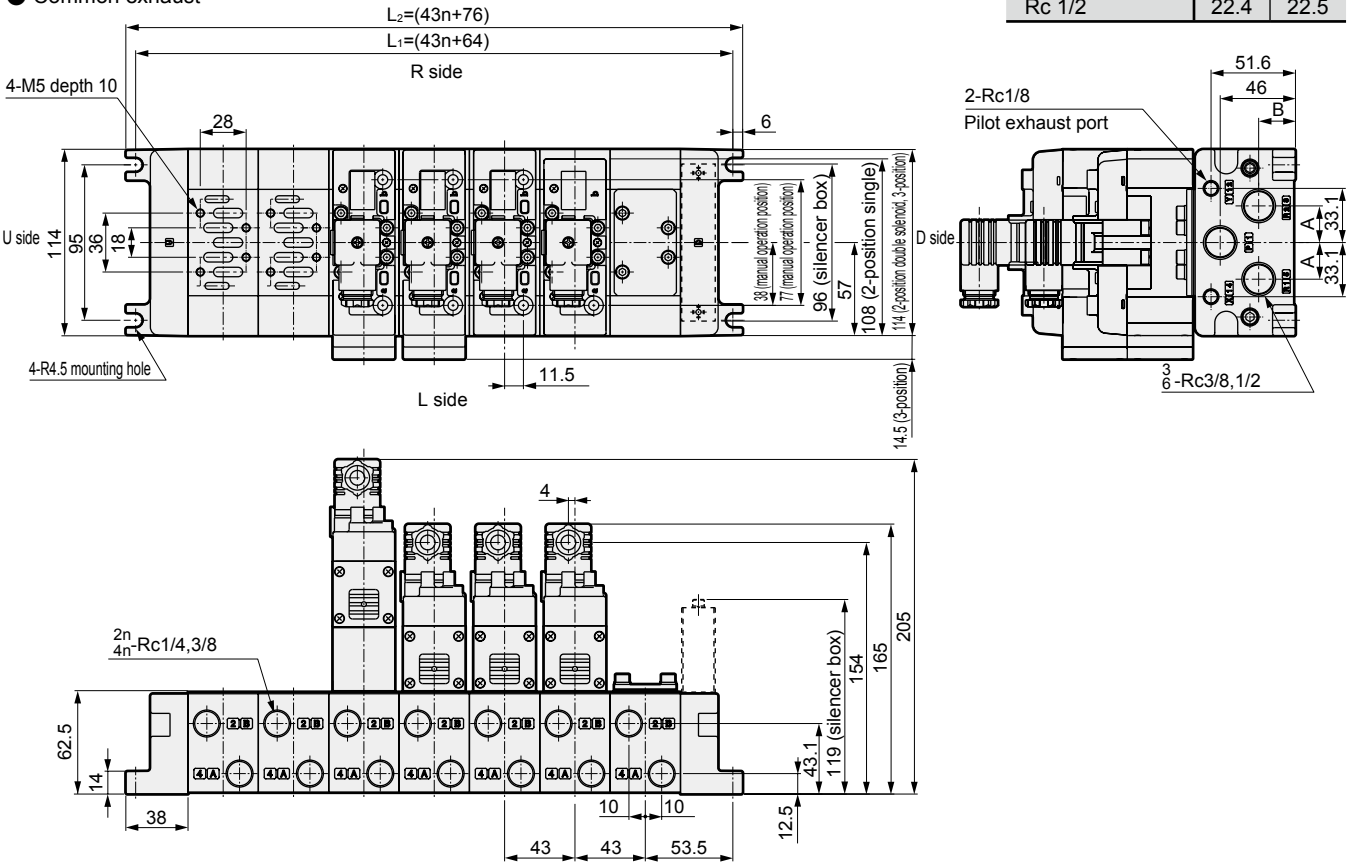

GMF1

● Individual exhaust

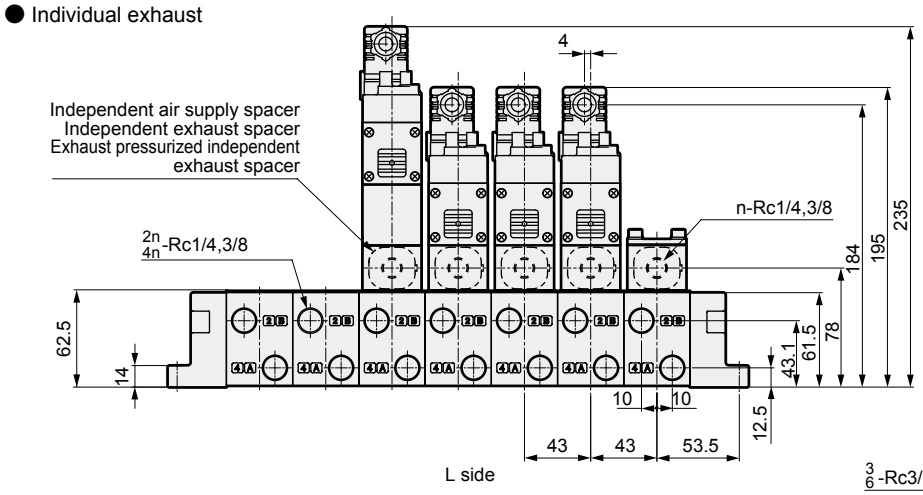

GMF1

● Rear piping

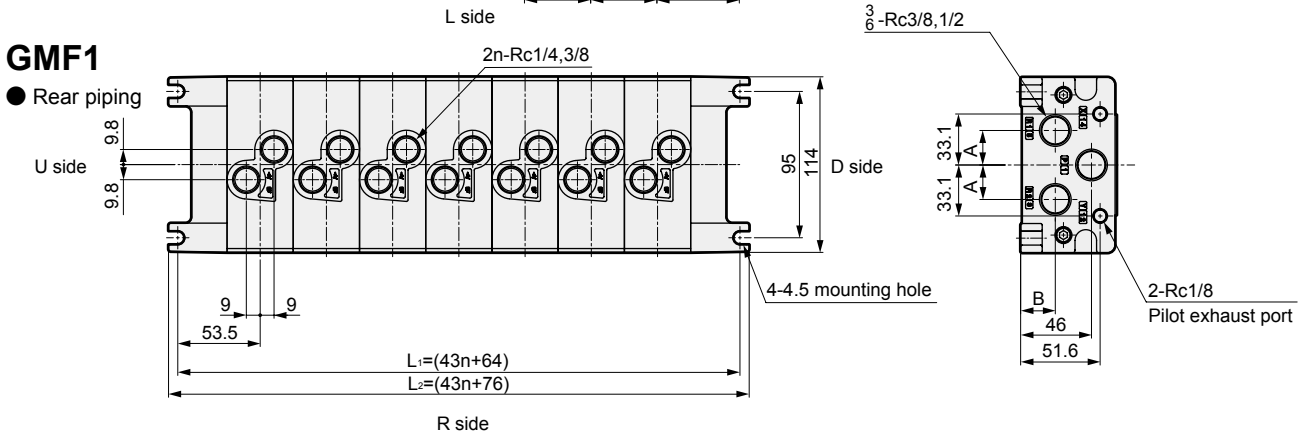

How to order

● Spacer regulator

CMF 1 - SR - A - T05 C

Ⓐ Size	
1	ISO size 1

Ⓑ Press reduction port position	
P	P port
A	A port
B	B port

Ⓒ Pressure gauge	
T05	MPa display (With limit marker)

Ⓓ Check valve	
Blank	None
C	Yes

List without check valve (blank) for SR-P and list with check valve (C) for SR-A and SR-B.

* Note that the direction of the pressure gauge is different with **CMF1-SR-A-T05C**.

CMF1-SR-P-T05
CMF1-SR-B-T05C

● Spacer regulator

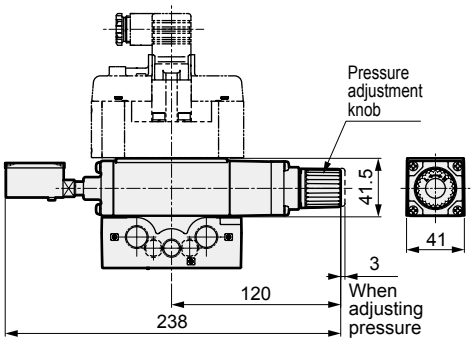

● JIS symbol

CMF1-SR-P-T05

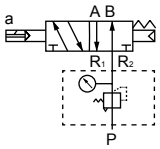

CMF1-SR-B-T05C

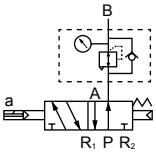

CMF1-SR-A-T05C

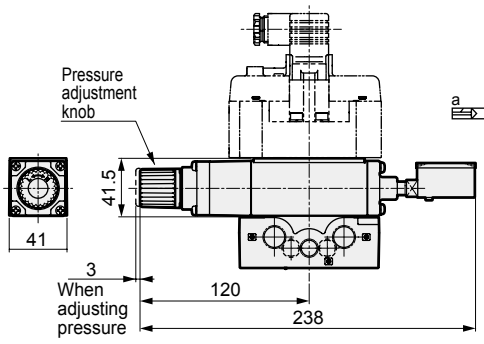

● JIS symbol

CMF1-SR-A-T05C

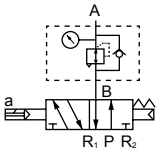

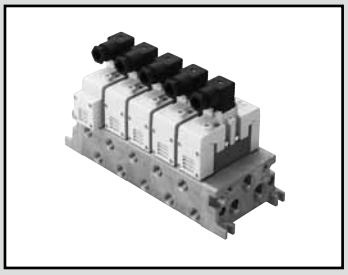

Individual wiring manifold ISO size 2
DIN terminal box
Pilot operated 5-port ISO valve

GMF2 Series

● Cylinder bore size: max. φ160

RoHS

Common specifications

Descriptions	Content
Manifold method	Manifold integrated
Manifold	Common supply/common exhaust Common supply/individual exhaust Individual supply/common exhaust Individual supply/individual exhaust Different pressure supply
Station No.	1 to 10 stations
Valve and operation	Pilot operated soft spool valve
Working fluid	Compressed air
Max. working pressure MPa	1.0 (≈150 psi, 10 bar)
Min. working pressure MPa	0.15 (≈22 psi, 1.5 bar) 0.20 (≈29 psi, 2 bar) (3-position) *1
Proof pressure MPa	1.50 (≈220 psi, 15 bar)
Ambient temperature °C	-5 (23°F) to 60 (140°F) (no freezing)
Fluid temperature °C	5 (41°F) to 60 (140°F)
Lubrication	Not required
Degree of protection	Dust proof/jet proof (IP65 or equivalent)
Leakage cm^3/min (A, B→R port)	10 (ANR) or less 3-position all ports closed non-leaking only 0.3 (ANR) or less *2
Vibration resistance m/s^2	50 or less
Shock resistance m/s^2	300 or less
Atmosphere	Cannot be used in corrosive gas environment.

*1: With YZ-S only, use with a working pressure of R1 > R2 ≥ 0.15 MPa.
*2: The initial value is listed.

Electrical specifications

Descriptions				Content
Rated voltage	V	AC		100(50/60 Hz) 110(50/60 Hz) 200(50/60 Hz) 220(50/60 Hz)
		DC		12,24
Voltage fluctuation range				±10%
Starting current	A	AC	100 V	0.056/0.044
			110 V	0.051/0.040
			200 V	0.034/0.026
			220 V	0.031/0.024
Holding current	A	AC	100 V	0.028/0.022
			110 V	0.025/0.020
			200 V	0.017/0.013
			220 V	0.015/0.012
		DC	12 V	0.083
			24 V	0.042
Power consumption	W	AC	100 V	1.8/1.4
			110 V	(1.8/1.5)
			200 V	2.1/1.6
			220 V	(2.2/1.7)
Values in ( ) are with lamp		DC	12 V	1(1.2)
			24 V	
Thermal class				B (molded coil)
Wiring method				Electrical plug connector

Individual specifications

Descriptions			GMF2
Port size *1	P/R1/R2 port		Rc1/2, Rc3/4
	A/B port		Rc3/8, Rc1/2
Response time *2 ms	2-position	Single	40 (ON), 60 (OFF)
		Double	40
	3-position		40 (when ON), 60 (when neutral)

*1: As G and NPT threads can also be used for piping port screws, contact CKD for details.
*2: The response time is the value with a working pressure of 0.5 MPa, no lubrication, and a DC power supply.
It depends on the pressure and the lubricant quality.

Weight

Manifold base	Station No.	1	2	3	4	5	6	7	8	9	10
(kg)		2.30	3.17	4.04	4.91	5.79	6.66	7.53	8.40	9.27	10.14
Silencer box	Model No.	SB									
Added to manifold base assembly (kg)		0.17									
Spacer	Model No.	P		R		SR		PC			
(kg)		0.41		0.41		1.18		0.54			

Flow characteristics

Model No.	Port size	Solenoid position	P→A/B		A/B→R1/R2	
			C[dm^3/(s·bar)]	b	C[dm^3/(s·bar)]	b
GMF2	Rc3/8	2-position single	9.7	0.12	11.0	0.14
		2-position double	9.7	0.12	11.0	0.14
		3-position all ports closed	9.2	0.12	10.1	0.15
		3-position A/B/R connection	9.2	0.11	11.6	0.11
		3-position P/A/B connection	9.6	0.11	10.2	0.18
		3-position all ports closed non-leaking	6.2	-	5.9	-

*1: Effective cross-sectional area S and sonic conductance C are converted as S ≈ 5.0 x C.

How to order DIN terminal box

● ISO size 2

GMF 2 5 - 03 L - 04 B ( ) - SB F - ( ) ( )

- Model No.
- Ⓐ Station No.
- Quantity of port size 03 of A/B port
- Ⓑ A/B port size *1
- Quantity of port size 04 of A/B port
- Ⓒ A/B port position *2
- Ⓓ P/R port size
- Ⓔ P/R port position *3 *4
- Ⓕ HY configuration
- Ⓖ Silencer box
- Ⓗ Option

Code	Content	Model No. GMF2
Ⓐ Station No.		
1	1 station	●
to	to	
10	10 stations	
Ⓑ A/B port size		
03	Rc3/8	●
04	Rc1/2	●
HX2	Rc3/8 and Rc 1/2 mixture	●
Ⓒ A/B port size		
Blank	Right	●
L	Left and right sides (select position with manifold specifications)	●
H	Left	●
Z	Rear side	●
T	Free selection (plug attached)	●
Ⓓ P/R port size		
04	Rc1/2	●
06	Rc3/4	●
HY2	Rc1/2 and Rc 3/4 mixture	●
Ⓔ P/R port position		
B	Top and bottom sides	●
D	Bottom side	●
U	Top side	●
E	P on top, R on bottom	●
F	P on bottom, R on top	●
T	Free selection (plug attached)	●
Ⓕ HY configuration		
Blank	When other than HY2 is selected with Ⓓ	●
DU	Rc1/2 on bottom, Rc3/4 on top	●
UD	Rc1/2 on top, Rc3/4 on bottom	●
Ⓖ Silencer box		
Blank	None	●
SB	Yes (D side installation)	●
Ⓗ Option		
Blank	None	●
F	P/A/B port filter integrated	●

⚠ Precautions for model No. selection

*1: HX is a mixture of bore sizes. Contact CKD for details.

*2: The instructions of Ⓒ indicate the port positions.
Those other than the instructions will all be plugs.

*3: The instructions of Ⓔ indicate the port positions.
The opposite side of the instructions will be plugs.

*4: When Ⓖ is with silencer box, this will be position selection for the P-port which can be selected from B, D, U, and T.
The R port is assembled with a plug for both the top and bottom.

[Example of model No.]

GMF25-03L-04B-SBF

Model: Manifold ISO size 2

Ⓐ Station No. : 5 stations
Ⓑ Ⓒ A/B port : Rc3/8 (left and right both sides piping)
Ⓓ Ⓔ P/R port : Rc1/2 (top and bottom both sides piping)
Ⓖ Silencer box : Yes (D side installation)
Ⓗ Option : P/A/B-port filter integrated

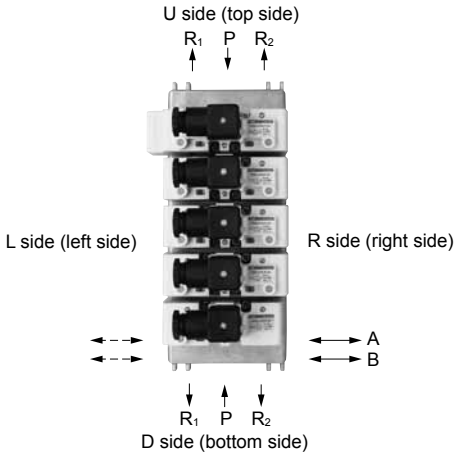

The valve body must be prepared separately. For how to order valves, refer to page 1446. For arrangement of manifolds with valve bodies, **the manifold specifications sheet** on page 1463 **will be necessary** in addition to each model No.

4GA/B
M4GA/B
MN4GA/B
4GA/B (mastr)
4GD/E
M4GD/E
MN4GD/E
4GA4/B4
MN3E MN4E
W4GA/B2
W4GB4
4TB
4L2-4/ LMF0
MN3S0 MN4S0
4SA/B0
4KA/B
4KA/B (mastr)
4F
4F (mastr)
PV5G GMF
PV5 GMF
PV5S-0
3QR 3QB
MV3QR
3MA/B0
3PA/B
P/M/B
NP/NAP/ NVP
4F*0EX
4F*0E
HMV HSV
2QV 3QV
SKH
PCD
Silencer
TotAirSys (Total Air)
TotAirSys (Gamma)
Ending

Dimensions: DIN terminal box

GMF2

● Common exhaust

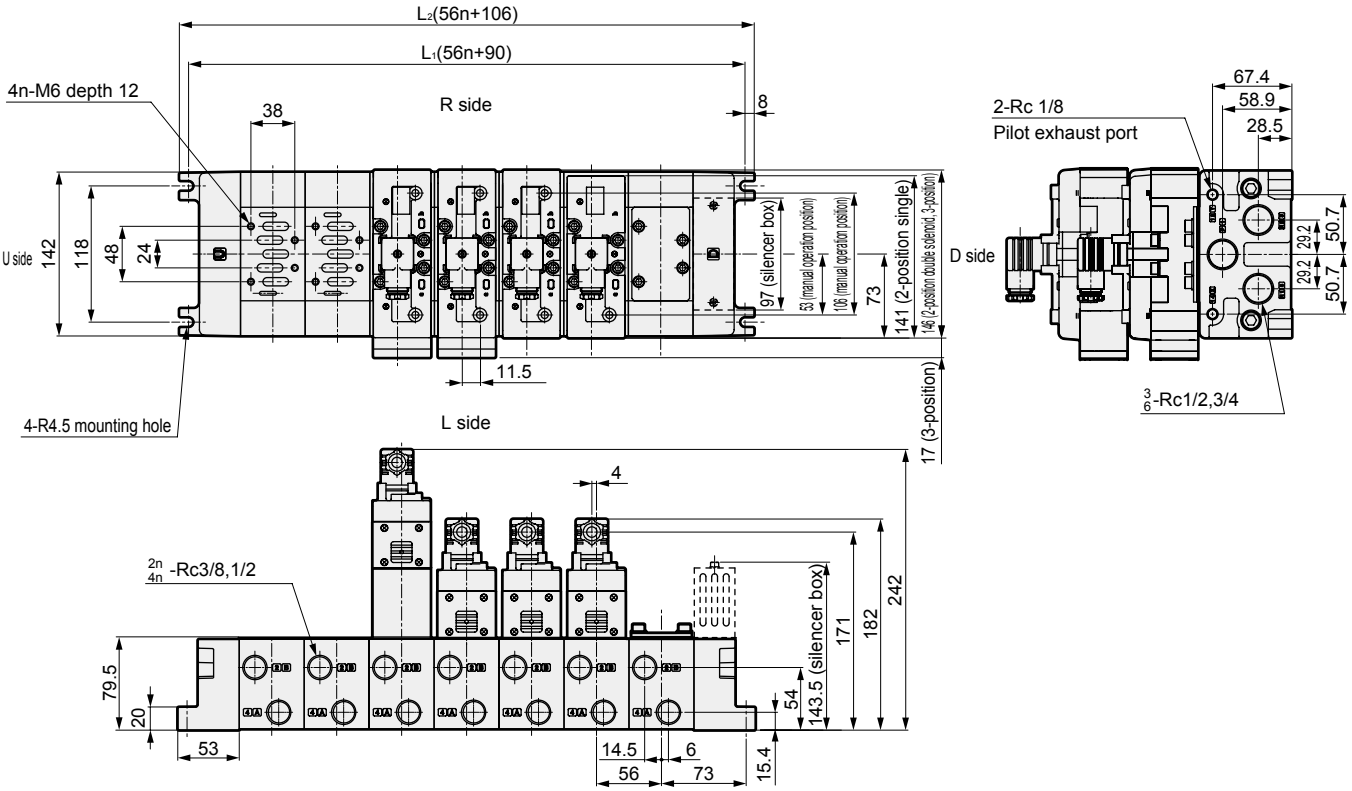

GMF2

● Individual exhaust

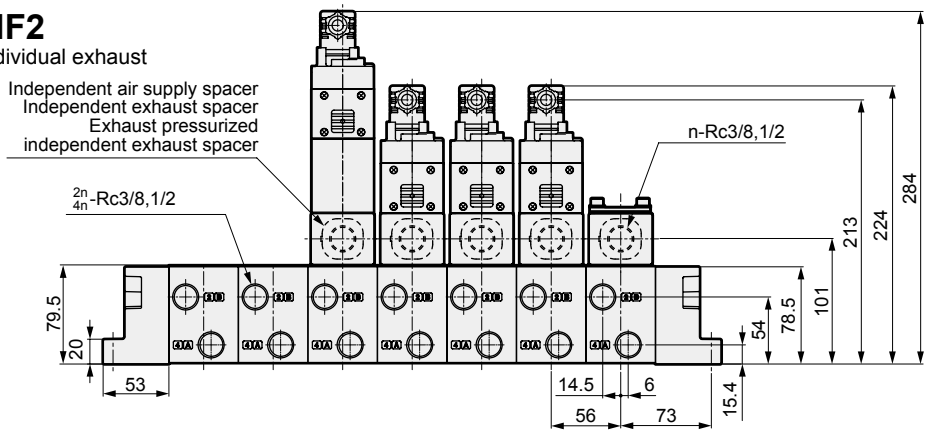

GMF2

● Rear piping

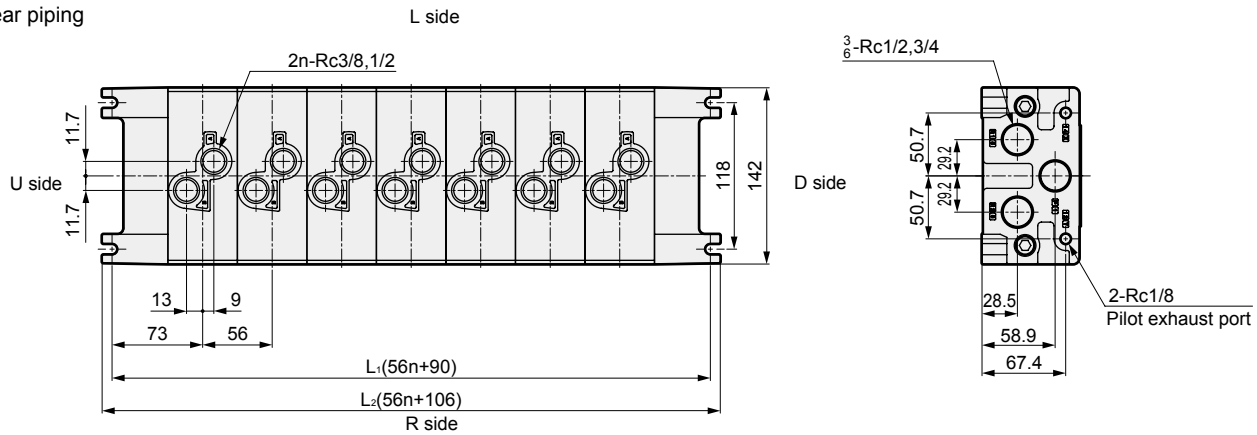

How to order

● Spacer regulator

CMF 2 - SR - A - T05 C

Ⓐ Size	
2	ISO size 2

Ⓑ Press reduction port position	
P	P port
A	A port
B	B port

Ⓒ Pressure gauge	
T05	MPa display (With limit marker)

Ⓓ Check valve	
Blank	None
C	Yes

List without check valve (blank) for SR-P and list with check valve (C) for SR-A and SR-B.

* Note that the direction of the pressure gauge is different with **CMF2-SR-A-T05C**.

CMF2-SR-P-T05
CMF2-SR-B-T05C

● Spacer regulator

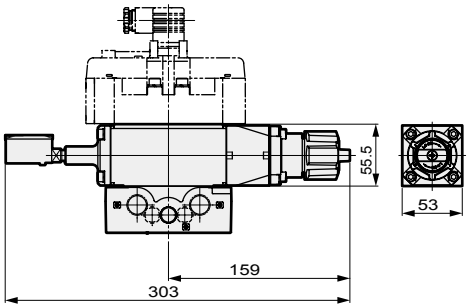

● JIS symbol

CMF2-SR-P-T05

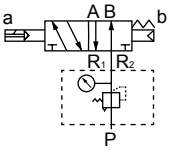

CMF2-SR-B-T05C

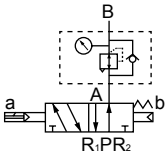

CMF2-SR-A-T05C

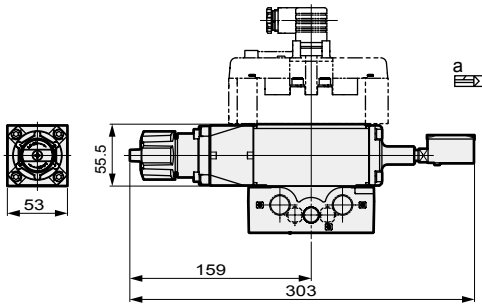

● JIS symbol

CMF2-SR-A-T05C

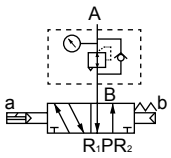

4GA/B
M4GA/B
MN4GA/B
4GA/B (mastr)
4GD/E
M4GD/E
MN4GD/E
4GA4/B4
MN3E MN4E
W4GA/B2
W4GB4
4TB
4L2-4/ LMF0
MN3S0 MN4S0
4SA/B0
4KA/B
4KA/B (mastr)
4F
4F (mastr)
PV5G GMF
PV5 GMF
PV5S-0
3QR 3QB
MV3QR
3MA/B0
3PA/B
P/M/B
NP/NAP/ NVP
4F*0EX
4F*0E
HMV HSV
2QV 3QV
SKH
PCD
Silencer
TotAirSys (Total Air)
TotAirSys (Gamma)
Ending

How to order DIN terminal box

GMFZ 5 - HX3 L - HY3 B DU F - ○ ○

- GMFZ: ISO size 1/2 mix manifolds
- 5: Ⓐ Station No.
- HX3: Ⓑ A/B port size
- L: Ⓒ A/B port position *1
- HY3: Ⓓ P/R port size
- B: Ⓔ P/R port position *2
- DU: Ⓕ HY configuration
- F: Ⓖ Option
- ○: Quantity of size 1
- ○: Quantity of size 2

Code	Content	Model No. GMFZ
Ⓐ Station No.		
2	2 stations	●
to	to	●
10	10 stations	●
Ⓑ A/B port size		
HX3	Size 1: 02/size 2: 03	●
HX4	Size 1: 02/size 2: 04	●
HX5	Size 1: 03/size 2: 03	●
HX6	Size 1: 03/size 2: 04	●
Ⓒ A/B port position		
Blank	Right	●
L	Left and right sides (select position with manifold specifications)	●
H	Left	●
Z	Rear side	●
T	Free selection (plug attached)	●
Ⓓ P/R port size		
HY3	Size 1: 03/size 2: 04	●
HY4	Size 1: 03/size 2: 06	●
HY5	Size 1: 04/size 2: 04	●
HY6	Size 1: 04/size 2: 06	●
Ⓔ P/R port position		
B	Top and bottom sides	●
D	Bottom side	●
U	Top side	●
E	P on top, R on bottom	●
F	P on bottom, R on top	●
T	Free selection (plug attached)	●
Ⓕ HY configuration		
DU	Smaller bore size on bottom, larger bore size on top, or 1 on bottom, 2 on top	●
UD	Smaller bore size on top, larger bore size on bottom, or 1 on top, 2 on bottom	●
Ⓖ Option		
Blank	None	●
F	P/A/B port filter integrated	●

⚠ Precautions for model No. selection

*1: Instructions of Ⓒ will be port positions. Those other than the instructions will all be plugs.
*2: Instructions of Ⓔ will be port positions. The opposite side of the instructions will be plugs.

The valve body must be prepared separately. For how to order valves, refer to pages 1440 and 1446. For arrangement of manifolds with valve bodies, **the manifold specifications sheet** on page 1464 **will be necessary** in addition to each model No.

No	Descriptions	Model No.	Fig.	Remarks
1	ISO size 1/2 mixed block	**GMFBZ-00L**	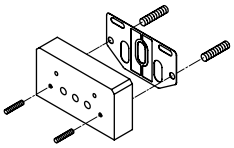	U side size 1 D side size 2 for mixed block with bolts and gasket
		GMFBZ-00R	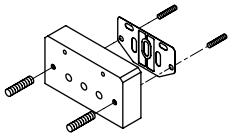	U side size 2 D side size 1 for mixed block with bolts and gasket

Mix manifold outline drawing

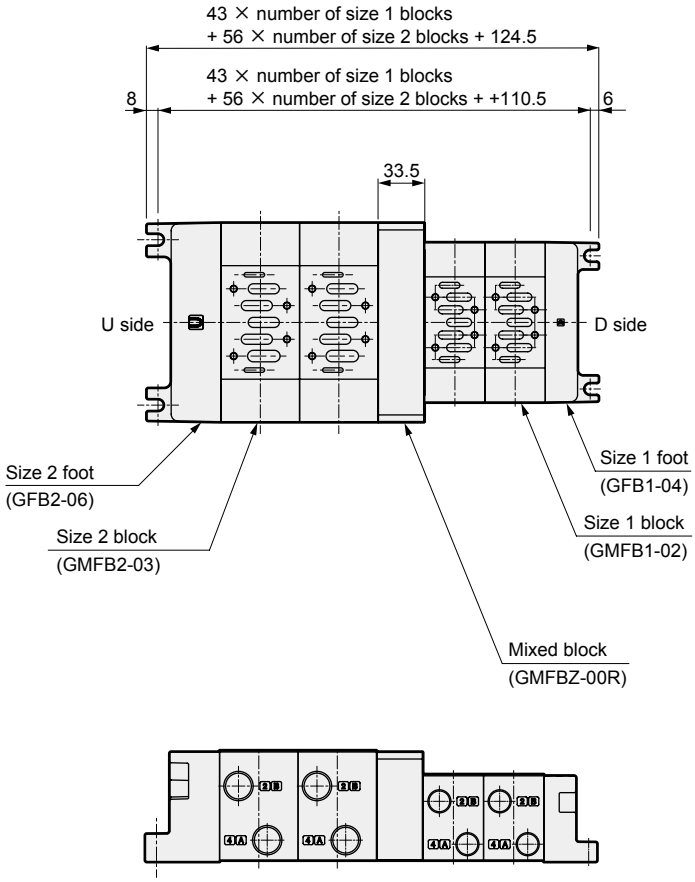

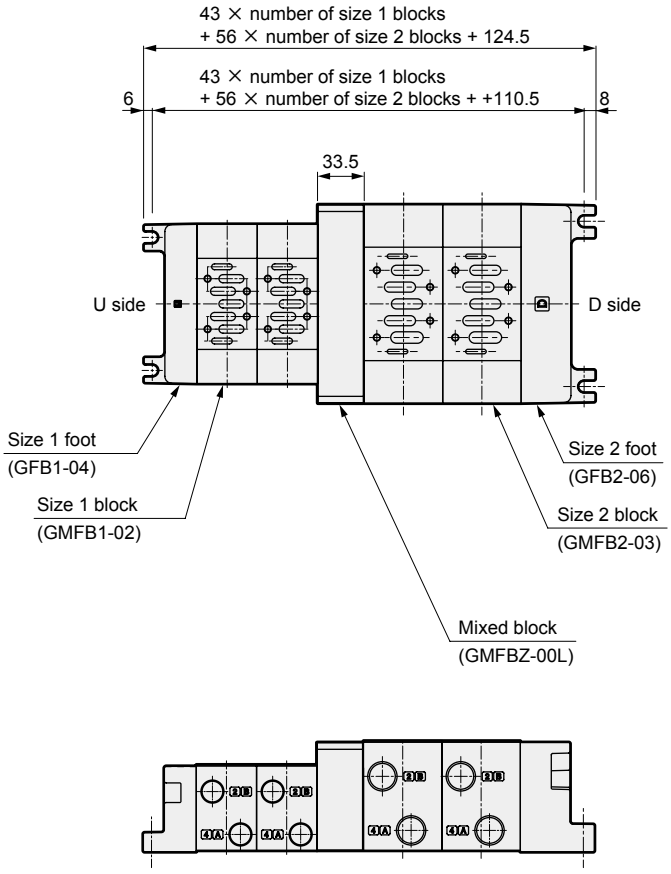

* The dimensions for the size 1/2 feet and the blocks are as listed on pages 1452 and 1456.

4GA/B
M4GA/B
MN4GA/B
4GA/B (mastr)
4GD/E
M4GD/E
MN4GD/E
4GA4/B4
MN3E MN4E
W4GA/B2
W4GB4
4TB
4L2-4/ LMF0
MN3S0 MN4S0
4SA/B0
4KA/B
4KA/B (mastr)
4F
4F (mastr)
PV5G GMF
PV5 GMF
PV5S-0
3QR 3QB
MV3QR
3MA/B0
3PA/B
P/M/B
NP/NAP/ NVP
4F*0EX
4F*0E
HMV HSV
2QV 3QV
SKH
PCD
Silencer
TotAirSys (Total Air)
TotAirSys (Gamma)
Ending

Manifold option

Optional descriptions	Model No. ISO size 1	Model No. ISO size 2	Remarks
1. Independent air supply spacer 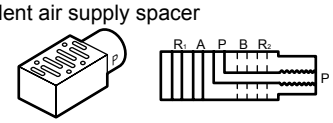	CMF1-P-02 (Rc1/4) 03 (Rc3/8)	CMF2-P-03 (Rc3/8) 04 (Rc1/2)	1. For individual air supply port Clamp/used for differing pressures 2. Individual exhaust for exhaust pressurization
2. Independent exhaust spacer 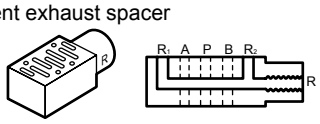	CMF1-R-02 (Rc1/4) 03 (Rc3/8)	CMF2-R-03 (Rc3/8) 04 (Rc1/2)	1-port exhaust with individual exhaust (back pressure countermeasures)
3. Adaptor 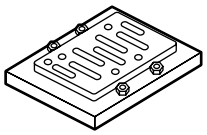	CU1-00 (FS/FD2 Series, Rc1/4, 3/8) CU1-01 (FS/FD3 Series, Rc1/4, 3/8, 1/2)	CU2-00 (FS/FD3 Series, Rc1/4, 3/8, 1/2) CU2-01 (FS/FD4 Series, Rc1/2, 3/4)	PV5G-6 and PV5G-8 are installed on conventional model type F^{S2}_{D3}. (Custom order product)
4. Masking plate 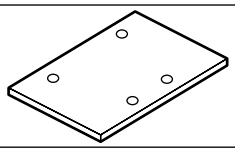	CM1-00	CM2-00	For PV5G-6 For PV5G-8 For discrete masking
5. Flow path cutoff plate 	GM1-01	GM2-01	Manifold (GMF1/GMF2) P/R_1/R_2 port For masking
6. Base gasket 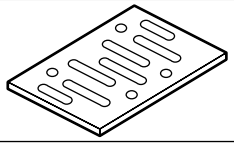	PV5G-6-BASE-GASKET	PV5G-8-BASE-GASKET	For PV5G-6 For PV5G-8 These cannot be used on the bottom surface of the spacers.
	PV5-6-BASE-GASKET	PV5-8-BASE-GASKET	For the bottom surface of spacers
7. Mounting screw 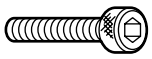	CMF1-M5X35	CMF2-M6X45	Set of 4
8. Spacer regulator 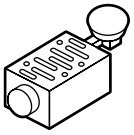	CMF1-SR-P-T05 CMF1-SR-A-T05C CMF1-SR-B-T05C Model No. selection page 1453	CMF2-SR-P-T05 CMF2-SR-A-T05C CMF2-SR-B-T05C Model No. selection page 1457	Use with different pressures
9. Air pilot check valve 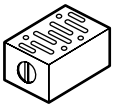	CMF1-PC	CMF2-PC	Retain custom position of cylinder
10. Foot U side 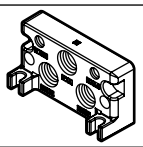	GFB1-03/04 U	GFB2-04/06 U	2 hexagon socket head cap screws, plugs, and a gasket on the U side foot are attached.
D side	GFB1-03/04 D	GFB2-04/06 D	
11. Manifold; block 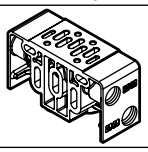	GMFB1-02/03 T	GMFB2-03/04 T	2 tie rods, plug and gasket are attached.
	GMFB1-02/03 Z	GMFB2-03/04 Z	2 tie rods and gasket are attached.
12. Tie rod 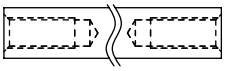	GMF1-TR-V*1 *1: 1 to 10 (station No.)	GMF2-TR-V*1 *1: 1 to 10 (station No.)	Tie rod length is from 1 station to 10 stations, shipped in sets of 2.
13. Tie rod for station expansion 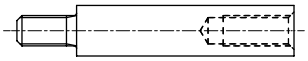	GMF1-TR-VZ	GMF2-TR-VZ	Use these when adding on to the set of 2 tie rods. Length can be added by 1 station.

Manifold

A wide variety of combinable supply, exhaust, and piping methods are available in the lineup.
Select the ideal function for your application.

1 General use

● Common exhaust method

The most common method, in which solenoid valve supply and exhaust is centralized in one location through the use of P (supply) and R (exhaust) ports passing through the connected manifold block interior.

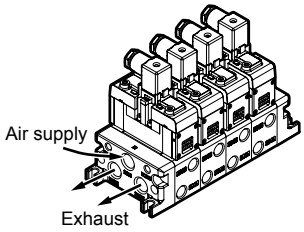

2 Applications for general use

● Individual exhaust method

As the R1/2 (exhaust) ports are independent for each solenoid valve, this prevents the popping out phenomenon of adjacent cylinders caused by back pressure.
Exhaust is processed individually by inserting an independent exhaust spacer (CMF1-R-*) between the manifold block and the valve body.

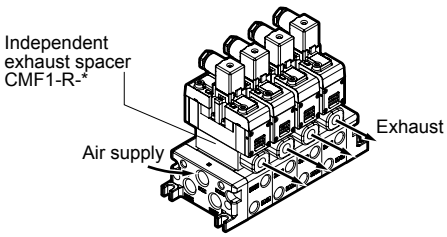

● Individual supply method

As the P (air supply) port is independent for each valve, it is possible to supply a different pressure only to certain valves within the manifold.
Air supply is processed individually by inserting an independent air supply spacer (CMF1-P-*) between the manifold block and the valve body.

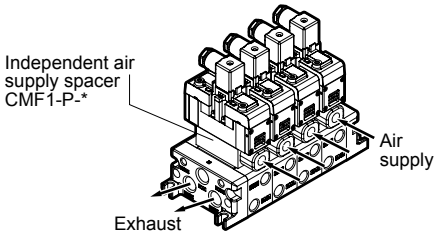

● Individual supply/individual exhaust method

Use this method in order to allow individual configurations for the P (air supply) port and R (exhaust) port of certain valves within the manifold.
Example: When the unit is being used with no lubrication but a certain valve alone must be lubricated
Air supply and exhaust are processed individually by inserting an independent air supply spacer (CMF1-P-*) and an independent exhaust spacer (CMF1-R-*) between the manifold block and the valve body.

● Different pressure supply method

With this method of supplying both higher and lower pressure to a single manifold, a flow path cutoff plate (GM1-01) is inserted between the manifold blocks with different pressures.

3 Special use (exhaust pressurized method)

Optimal for use when there is a need to supply two or more types of different pressures to a single manifold.
Example: When driving a 2-piston cylinder used with a welder

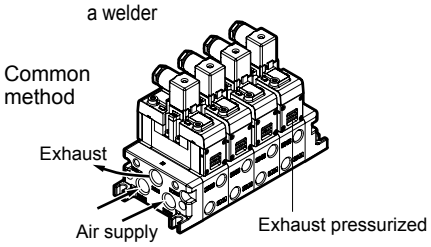

● Example of use of exhaust pressurized type

Common method

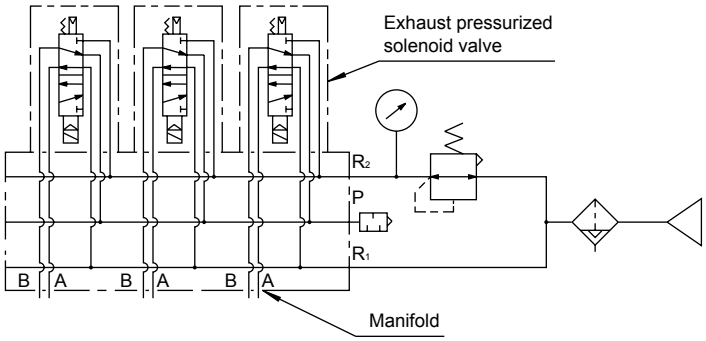

● Terminal box (model No.: PV5G-DIN-TRM-BOX)

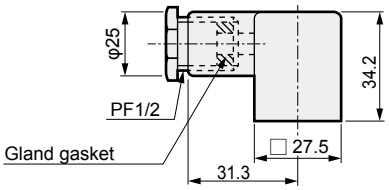

Gland gasket inner diameter	Color	Compatible (cord/cable) O.D.
φ10.5	Black	φ8.5 to φ11.5

How to wire

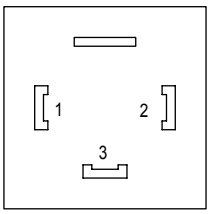

Pin No.	Name
1	a SOL
2	b SOL
3	COM

There is no specification of polarity when using a DC power supply.

4 General/special common descriptions

● Rear piping method

When piping cannot be installed from the side, it is possible to install all or part of the piping of A/B ports from the bottom surface of the manifold.

4GA/B
M4GA/B
MN4GA/B
4GA/B (mastr)
4GD/E
M4GD/E
MN4GD/E
4GA4/B4
MN3E MN4E
W4GA/B2
W4GB4
4TB
4L2-4/ LMF0
MN3S0 MN4S0
4SA/B0
4KA/B
4KA/B (mastr)
4F
4F (mastr)
PV5G GMF
PV5 GMF
PV5S-0
3QR 3QB
MV3QR
3MA/B0
3PA/B
P/M/B
NP/NAP/ NVP
4F*0EX
4F*0E
HMV HSV
2QV 3QV
SKH
PCD
Silencer
TotAirSys (Total Air)
TotAirSys (Gamma)
Ending

Manifold specifications sheet

ISO size 1 DIN terminal box

Issued / /

Your company name

Contact

Order No.

● Contact ● Quantity Set ● Delivery date /

Slip No.	Order No.

● Manifold model No.

GMF 1 □ - □ □ - □ □ □ - □ □ - □ - □ □

Ⓐ ISO size | Ⓑ Station No. | Ⓒ A/B Port size | Ⓓ A/B Port position | Ⓔ P/R Port size | Ⓕ P/R Port position | Ⓖ HY configuration | Ⓗ Silencer box | Ⓘ Manifold option | Ⓙ Voltage | Ⓚ Surge suppressor/lamp | Ⓛ Valve option

Ⓐ ISO size		Ⓑ Station No.		Ⓒ A/B Port size		Ⓓ A/B Port position		Ⓔ P/R Port size		Ⓕ P/R Port position	
1	PV5G-6	1	1 station	02	Rc¼	Blank	Right	03	Rc⅜	B	Top/bottom sides
		to	to	03	Rc⅜	L	Left/right sides	04	Rc½	D	Bottom side
		10	10 stations	HX1	Rc¼, Rc⅜Mix	H	Left	HY1	Rc⅛ , Rc½ Mix	U	Top side
						Z	Rear side			E	P: top/R: bottom
						T	Plug attached			F	P: bottom/R: top
										T	Plug attached

Ⓖ HY configuration		Ⓗ Silencer box		Ⓘ Manifold option	
Blank	When other than HY is selected with Ⓔ	Blank	None	Blank	None
		SB	Yes (D installation)	F	P/A/B port filter equipped
DU	Rc⅜ on bottom, Rc½ on top				
UD	Rc⅜ on top, Rc½ on bottom				

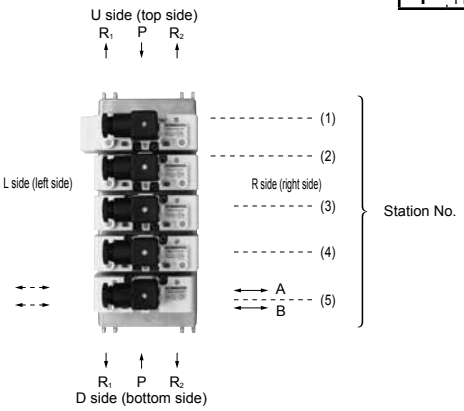

Ⓙ Voltage		Ⓚ Surge suppressor/lamp		Ⓛ Valve option	
1	100 VAC	Blank	None	Blank	None
2	200 VAC	N	With surge suppressor/indicator lamp	A	Coolant proof
3	24 VDC				
4	12 VDC				
5	110 VAC				
6	220 VAC				

Note: Items Ⓙ , Ⓚ , and Ⓛ are when the manifold is assembled and the mounted valve option has been selected.

★ When placing an order, list the solenoid valve model No. (1) to (9) from the figure at left in the following field for the solenoid valve model No.
When selecting options, mark the corresponding field for the option below with a circle.

Station No			1	2	3	4	5	6	7	8	9	10
Solenoid valve model No.	PV5G-6											
When L has been selected with Ⓓ,designate the plug position		R										
		L										
Option	Air supply spacer											
	Exhaust spacer											
	Pilot check valve											
	Spacer regulator	CMF*-SR-P										
		CMF*-SR-A										
		CMF*-SR-B										
	Flow path cutoff plate	Air supply path cutoff plate										
		Exhaust path cutoff plate										
	When Ⓒ is HX, specify the mixed configuration of the bore size.	02										
		03										

		Solenoid valve model No.	
2-position single		PV5G-6-FG-S	(1)
2-position double		PV5G-6-FG-D	(2)
3-position all ports closed	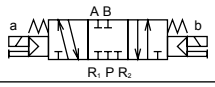	PV5G-6-FHG-D	(3)
3-position A-B-R connection	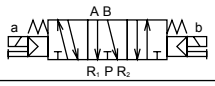	PV5G-6-FJG-D	(4)
3-position P-A-B connection		PV5G-6-FIG-D	(5)
3-position all ports closed non-leaking	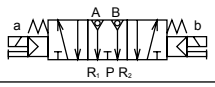	PV5G-6-FPG-D	(6)
2-position single exhaust pressurized	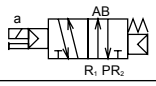	PV5G-6-YZ-S	(7)
2-position double exhaust pressurized	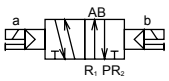	PV5G-6-YZ-D	(8)
Masking plate		CM1-00	(9)

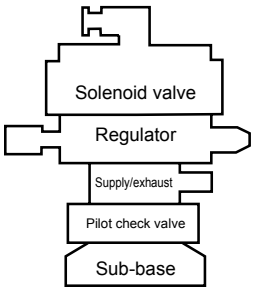

Order of assembly of options (spacers)

Note) The order from the sub-base to the solenoid valve is basically as shown in the figure at left. For spacers not in use, simply stack them as removed.

Manifold specifications sheet

ISO size 2 DIN terminal box

Issued / /

Your company name

Contact

Order No.

● Contact ● Quantity Set ● Delivery date /

Slip No.	Order No.

● Manifold model No.

GMF 2 □ - □ □ - □ □ □ - □ □ - □ - □ □

Ⓐ ISO size, Ⓑ Station No., Ⓒ A/B Port size, Ⓓ A/B Port position, Ⓔ P/R Port size, Ⓕ P/R Port position, Ⓖ HY configuration, Ⓗ Silencer box, Ⓘ Manifold option, Ⓙ Voltage, Ⓚ Surge suppressor/lamp, Ⓛ Valve option

Ⓐ ISO size		Ⓑ Station No.		Ⓒ A/B Port size		Ⓓ A/B Port position		Ⓔ P/R Port size		Ⓕ P/R Port position	
2	PV5G-8	1	1 station	03	Rc⅜	Blank	Right	04	Rc½	B	Top/bottom sides
		to	to	04	Rc½	L	Left/right sides	06	Rc¾	D	Bottom side
		10	10 stations	HX2	Rc⅜, Rc½ Mix	H	Left	HY2	Rc½, Rc⅜Mix	U	Top side
						Z	Rear side			E	P: top/R: bottom
						T	Plug attached			F	P: bottom/R: top
										T	Plug attached

Ⓖ HY configuration		
Blank	When other than HY is selected with Ⓔ	
DU	Rc½ on bottom, Rc¾ on top	
UD	Rc½ on top, Rc¾on bottom	

Ⓗ Silencer box		Ⓘ Manifold option	
Blank	None	Blank	None
SB	Yes (D installation)	F	P/A/B port filter equipped

Ⓙ Voltage		Ⓚ Surge suppressor/lamp		Ⓛ Valve option	
1	100 VAC	Blank	None	Blank	None
2	200 VAC	N	With surge suppressor/indicator lamp	A	Coolant proof
3	24 VDC				
4	12 VDC				
5	110 VAC				
6	220 VAC				

Note: Items Ⓙ, Ⓚ, and Ⓛ are when the manifold is assembled and the mounted valve option has been selected.

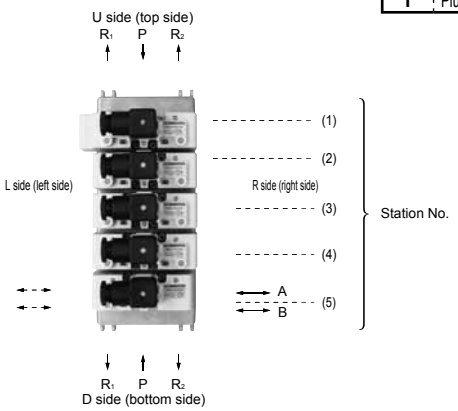

★ When placing an order, list the solenoid valve model No. (1) to (9) from the figure at left in the following field for the solenoid valve model No.
When selecting options, mark the corresponding field for the option below with a circle.

Station No			1	2	3	4	5	6	7	8	9	10
Solenoid valve model No.	PV5G-8											
When L has been selected with Ⓓ,designate the plug position		R										
		L										
Option	Air supply spacer											
	Exhaust spacer											
	Pilot check valve											
	Spacer Regulator	CMF*-SR-P										
		CMF*-SR-A										
		CMF*-SR-B										
	Flow path cutoff plate	Air supply path cutoff plate										
		Exhaust path cutoff plate										
	When Ⓒ is HX, specify the mixed configuration of the bore size.	03										
		04										

		Solenoid valve model No.	
2-position single	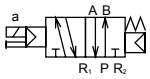	PV5G-8-FG-S	(1)
2-position double		PV5G-8-FG-D	(2)
3-position all ports closed	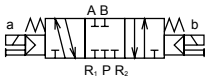	PV5G-8-FHG-D	(3)
3-position A-B-R connection		PV5G-8-FJG-D	(4)
3-position P-A-B connection	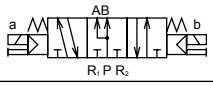	PV5G-8-FIG-D	(5)
3-position all ports closed non-leaking	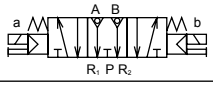	PV5G-8-FPG-D	(6)
2-position single exhaust pressurized	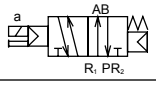	PV5G-8-YZ-S	(7)
2-position double exhaust pressurized	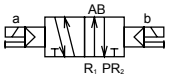	PV5G-8-YZ-D	(8)
Masking plate		CM2-00	(9)

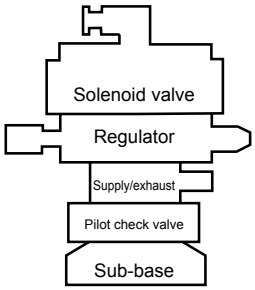

Order of assembly of options (spacers)

Note) The order from the sub-base to the solenoid valve is basically as shown in the figure at left. For spacers not in use, simply stack them as removed.

4GA/B
M4GA/B
MN4GA/B
4GA/B (mastr)
4GD/E
M4GD/E
MN4GD/E
4GA4/B4
MN3E MN4E
W4GA/B2
W4GB4
4TB
4L2-4/ LMF0
MN3S0 MN4S0
4SA/B0
4KA/B
4KA/B (mastr)
4F
4F (mastr)
PV5G GMF
PV5 GMF
PV5S-0
3QR 3QB
MV3QR
3MA/B0
3PA/B
P/M/B
NP/NAP/ NVP
4F*0EX
4F*0E
HMV HSV
2QV 3QV
SKH
PCD
Silencer
TotAirSys (Total Air)
TotAirSys (Gamma)
Ending

Manifold specifications sheet

ISO size 1/2 mixture DIN terminal box

Issued / /

Your company name

Contact

Order No.

● Contact ● Quantity Set ● Delivery date /

Slip No.	Order No.

● Manifold model No.

GMF Z ☐ - ☐ ☐ - ☐ ☐ ☐ ☐ - ☐ - ☐ ☐

Ⓐ ISO size — Ⓑ Station No. — Ⓒ A/B Port size — Ⓓ A/B Port position — Ⓔ P/R Port size — Ⓕ P/R Port position — Ⓖ HY configuration — Ⓗ Manifold option — Ⓘ Voltage — Ⓙ Surge suppressor/lamp — Ⓚ Valve option

Ⓐ ISO size		Ⓑ Station No.		Ⓒ A/B Port size		Ⓓ A/B Port position		Ⓔ P/R Port size		Ⓕ P/R Port position		Ⓖ HY configuration		Ⓗ Manifold option		Ⓘ Voltage	
Z	Mixture of size 1 and 2	1	1 station	HX3	1:02/2:03	Blank	Right	HY3	1:03/2:04	B	Top/bottom sides	DU	Size 1 on bottom and size 2 on top	Blank	None	1	100 VAC
		to	to	HX4	1:02/2:04	L	Left/right sides	HY4	1:03/2:06	D	Bottom side			F	P/A/B port filter equipped	2	200 VAC
		10	10 stations	HX5	1:03/2:03	H	Left	HY5	1:04/2:04	U	Top side	UD	Size 1 on top and size 2 on bottom			3	24 VDC
				HX6	1:03/2:04	Z	Rear side	HY6	1:04/2:06	E	P: top/R: bottom					4	12 VDC
						T	Plug attached			F	P: bottom/R: top					5	110 VAC
										T	Plug attached					6	220 VAC

Ⓙ Surge suppressor/lamp		Ⓚ Valve option	
Blank	None	Blank	None
N	With surge suppressor/indicator lamp	A	Coolant proof

Note: Items Ⓘ, Ⓙ, and Ⓚ are when the manifold is assembled and the mounted valve option has been selected.

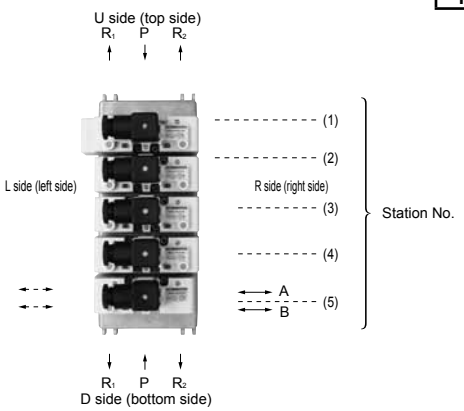

★ When placing an order, list the solenoid valve model No. (1) to (9) from the figure at left in the following field for the solenoid valve model No.
When selecting options, mark the corresponding field for the option below with a circle.

Station No			1	2	3	4	5	6	7	8	9	10
Solenoid valve model No.	PV5G-6											
	PV5G-8											
When L has been selected with Ⓓ,designate the plug position		R										
		L										
Option	Air supply spacer											
	Exhaust spacer											
	Pilot check valve											
	Spacer Regulator	CMF*-SR-P										
		CMF*-SR-A										
		CMF*-SR-B										
	Flow path Cutoff plate	Air supply path cutoff plate										
		Exhaust path cutoff plate										
	When Ⓒ is HX, specify the mixed configuration of the bore size.	02										
		03										
		04										

		Solenoid valve model No.	
2-position single	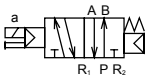	PV5G-*-FG-S	(1)
2-position double		PV5G-*-FG-D	(2)
3-position all ports closed	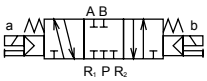	PV5G-*-FHG-D	(3)
3-position A-B-R connection	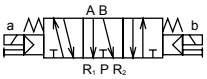	PV5G-*-FJG-D	(4)
3-position P-A-B connection		PV5G-*-FIG-D	(5)
3-position all ports closed non-leaking	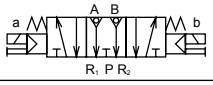	PV5G-*-FPG-D	(6)
2-position single exhaust pressurized	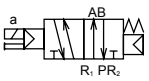	PV5G-*-YZ-S	(7)
2-position double exhaust pressurized	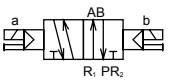	PV5G-*-YZ-D	(8)
Masking plate		CM*-00	(9)

Note) The * marking for solenoid valve is either “6” or “8”. With the masking plate and options, this will be either “1” or “2”.

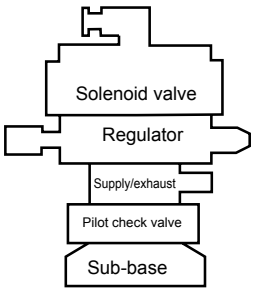

Order of assembly of options (spacers)

Note) The order from the sub-base to the solenoid valve is basically as shown in the figure at left. For spacers not in use, simply stack them as removed.

PV5/GMF
(I/O connector)

Pilot operated 5-port valve **ISO valve**

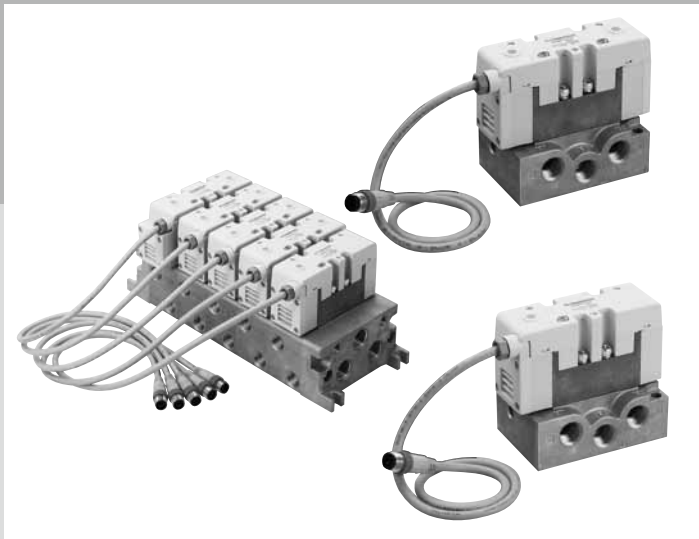

CONTENTS

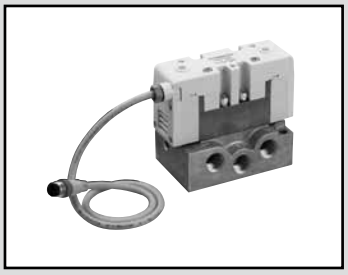

Single valve ISO size 1
I/O connector
Pilot operated 5-port ISO valve

PV5-6R Series

● Cylinder bore size: max. φ100

JIS symbol

● 5-port valve

2-position single (FG-S)

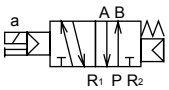

2-position double (FG-D)

3-position all ports closed (FHG)

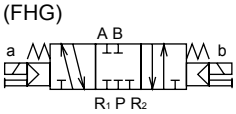

3-position all ports closed Non-leaking (FPG)

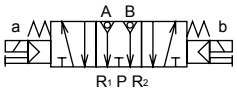

3-position A/B/R connection (FJG)

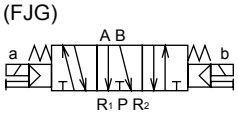

3-position P/A/B connection (FIG)

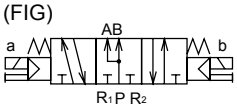

Common specifications

Descriptions	Content
Valve and operation	Pilot operated soft spool valve
Working fluid	Compressed air
Max. working pressure MPa	1.0 (≈150 psi, 10 bar)
Min. working pressure MPa	0.15 (≈22 psi, 1.5 bar) 0.20 (≈29 psi, 2 bar) (3-position)
Proof pressure MPa	1.50 (≈220 psi, 15 bar)
Ambient temperature °C	-5 (23°F) to 60 (140°F) (no freezing)
Fluid temperature °C	5 (41°F) to 60 (140°F)
Lubrication	Not required
Degree of protection	Dust proof/jet proof (IP65 or equivalent)
Leakage cm^3/min (A, B→R port)	10 (ANR) or less 3-position all ports closed non-leaking only 0.3 (ANR) or less *1
Vibration resistance m/s^2	50 or less
Shock resistance m/s^2	300 or less
Atmosphere	Cannot be used in corrosive gas environment.

*1: The initial value is listed.

Electrical specifications

Descriptions		Content
Rated voltage V	DC	24
Voltage fluctuation range		±10%
Power consumption W(Current value A)		1.2 (0.050) * Value for models with lamp.
Thermal class		B (molded coil)
Wiring method		I/O connector

Individual specifications

Descriptions			PV5-6R
Port size *1			Rc1/4, Rc3/8
Response time ms *2	2-position	Single	30 (ON), 40 (OFF)
		Double	30
	3-position		30 (when ON), 50 (when neutral)
Weight kg *3	2-position	Single	0.40
		Double	0.44
	3-position	Other than non-leaking	0.46
		All ports closed non-leaking	1.12

*1: As G and NPT threads can also be used for piping port screws, contact CKD for details.
*2: The response time is the value at 0.5 MPa working pressure, with no lubrication. It depends on the pressure and the lubricant quality.
*3: The weight listed is the weight without the sub-plate.

Flow characteristics

Model No.	Port size	Solenoid position	P→A/B		A/B→R1/R2	
			C [dm^3/(s·bar)]	b	C [dm^3/(s·bar)]	b
PV5-6R	Rc1/4	2-position single	6.1	0.28	6.7	0.20
		2-position double	6.1	0.28	6.7	0.20
		3-position all ports closed	5.2	0.32	5.6	0.30
		3-position A/B/R connection	5.1	0.32	6.9	0.16
		3-position P/A/B connection	6.3	0.28	5.9	0.28
		3-position all ports closed non-leaking	3.4	-	3.0	-

*1: Effective cross-sectional area S and sonic conductance C are converted as S ≈ 5.0 x C.

Coolant proof specifications

Select the option “A” of Item Ⓑ in How to order on page 1467.

How to order I/O connector

● ISO Size 1

PV5 - **6R** - **FG-S** - ( ) - **A03** - **TC**

- PV5: Model No.
- 6R: ISO size 1
- FG-S: Ⓐ Solenoid position
- ( ): Ⓑ Option
- A03: Ⓒ With/without sub-plate and port size
- TC: NPN, PNP Common

Code	Content		Model No. PV5-6R
Ⓐ Solenoid position			
FG-S	P pressurized type	2-position single	●
FG-D		2-position double	●
FHG-D		3-position all ports closed	●
FJG-D		3-position ABR connection	●
FIG-D		3-position PAB connection	●
FPG-D		3-position all ports closed non-leaking	●
Ⓑ Option			
Blank	None		●
A	Coolant proof		●
Ⓒ With/without sub-plate and port size			
Blank	Without sub-plate		●
A02	Side piping Rc1/4 (Rc3/8 for R port only)		●
A03	Side piping Rc3/8		●

[Example of model No.]

PV5-6R-FG-S-A03-TC

Model: PV5/ISO size 1 (I/O connector)

Ⓐ Solenoid position : P pressurized 2-position single solenoid

Ⓒ Sub-plate port size : side piping Rc3/8

● Remarks

Descriptions	Content
(1) Wiring method	I/O connector (M12) NPN, PNP common type
(2) Rated voltage	24 VDC
(3) Surge suppressor/lamp	Standard with surge suppressor and indicator lamp

*1: Refer to page 1436 for the circuit diagram with a surge suppressor/lamp.

ISO size 1 sub-plate specifications and how to order

CB1 - **A02**

Ⓐ Piping connection method

Code	Type	P/A/B port	R1/R2 port	Weight (kg)
Ⓐ Piping connection method				
A02	Side piping	Rc1/4	Rc 3/8	0.27
A03		Rc3/8		

4GA/B
M4GA/B
MN4GA/B
4GA/B (mastr)
4GD/E
M4GD/E
MN4GD/E
4GA4/B4
MN3E MN4E
W4GA/B2
W4GB4
4TB
4L2-4/ LMF0
MN3S0 MN4S0
4SA/B0
4KA/B
4KA/B (mastr)
4F
4F (mastr)
PV5G GMF
PV5 GMF
PV5S-0
3QR 3QB
MV3QR
3MA/B0
3PA/B
P/M/B
NP/NAP/ NVP
4F*0EX
4F*0E
HMV HSV
2QV 3QV
SKH
PCD
Silencer
TotAirSys (Total Air)
TotAirSys (Gamma)
Ending

Internal structure and parts list: I/O connector

PV5-6R-FG-S

● 2-position single

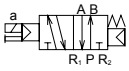

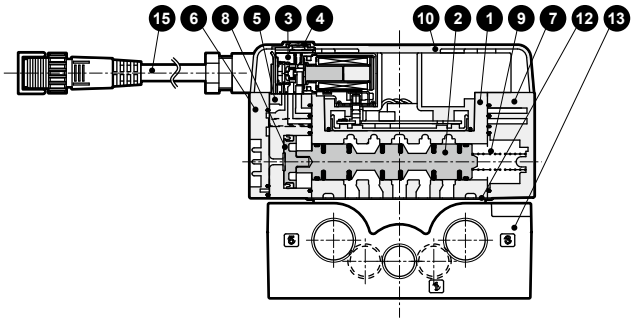

PV5-6R-FG-D

● 2-position double

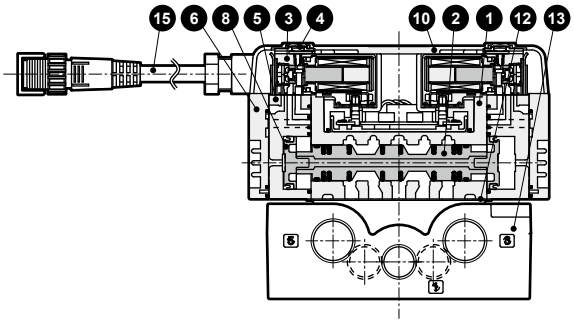

PV5-6R-FHG-D

● 3-position all ports closed

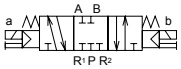

PV5-6R-FJG-D

● 3-position A/B/R connection

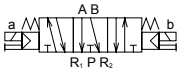

PV5-6R-FIG-D

● 3-position P/A/B connection

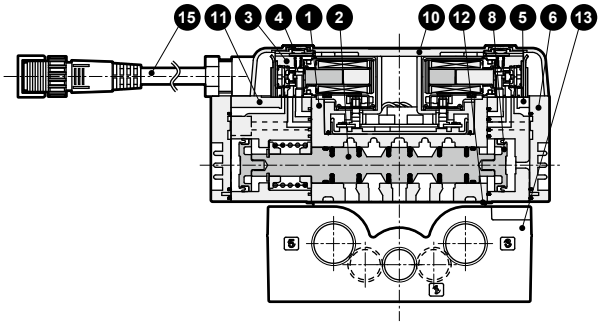

PV5-6R-FPG-D

● 3-position all ports closed non-leaking

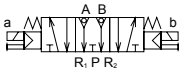

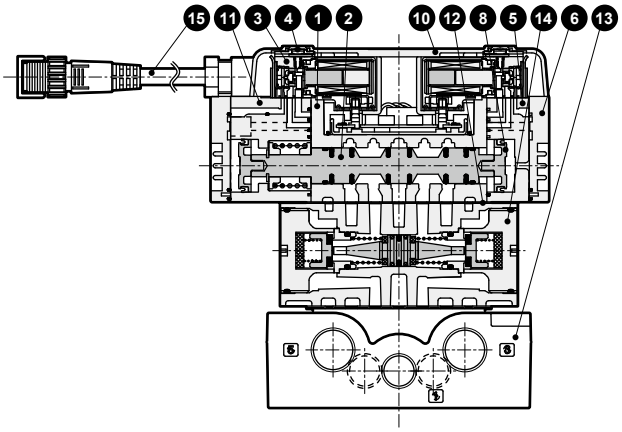

Main parts list

No.	Part name	Material	No.	Part name	Material
1	Body	Aluminum alloy die-casting	9	Spring S	-
2	Spool assembly	-	10	Wiring cover	Resin
3	Pilot valve	-	11	Pilot valve assembly for 3-position	Resin
4	Manual override	-	12	Gasket	-
5	Pilot valve assembly for double	Resin	13	Sub-plate	Aluminum alloy die-casting
6	Cap D	Resin	14	Air pilot check valve	-
7	Cap S	Resin	15	I/O cable assembly	-
8	Piston D assembly	-			

MEMO

4GA/B
M4GA/B
MN4GA/B
4GA/B (mastr)
4GD/E
M4GD/E
MN4GD/E
4GA4/B4
MN3E MN4E
W4GA/B2
W4GB4
4TB
4L2-4/ LMF0
MN3S0 MN4S0
4SA/B0
4KA/B
4KA/B (mastr)
4F
4F (mastr)
PV5G GMF
PV5 GMF
PV5S-0
3QR 3QB
MV3QR
3MA/B0
3PA/B
P/M/B
NP/NAP/ NVP
4F*0EX
4F*0E
HMV HSV
2QV 3QV
SKH
PCD
Silencer
TotAirSys (Total Air)
TotAirSys (Gamma)
Ending

Dimensions: I/O connector (without sub-plate)

PV5-6R-FG-S

● 2-position single

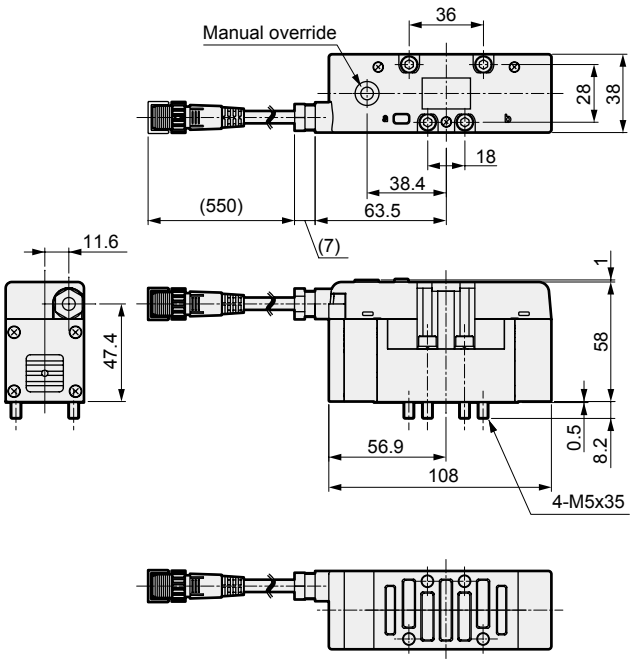

PV5-6R-FG-D

● 2-position double

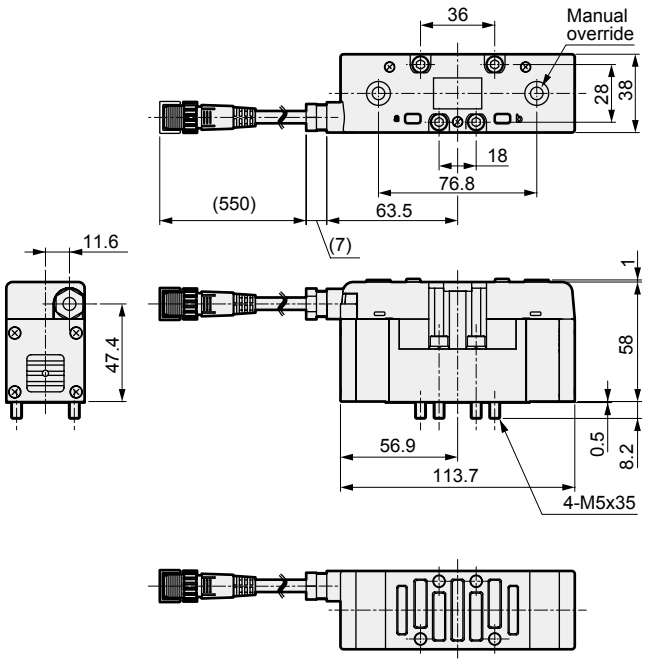

PV5-6R-FHG-D
PV5-6R-FJG-D
PV5-6R-FIG-D

● 3-position

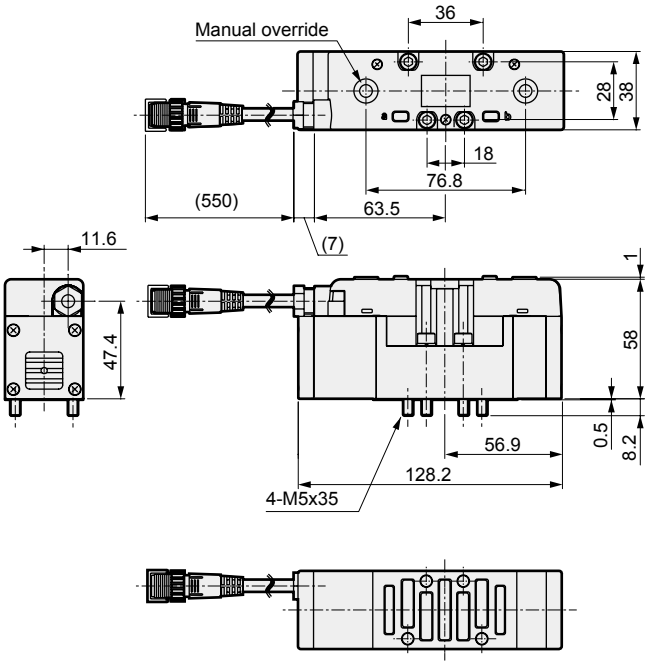

PV5-6R-FPG-D

● 3-position/non-leaking

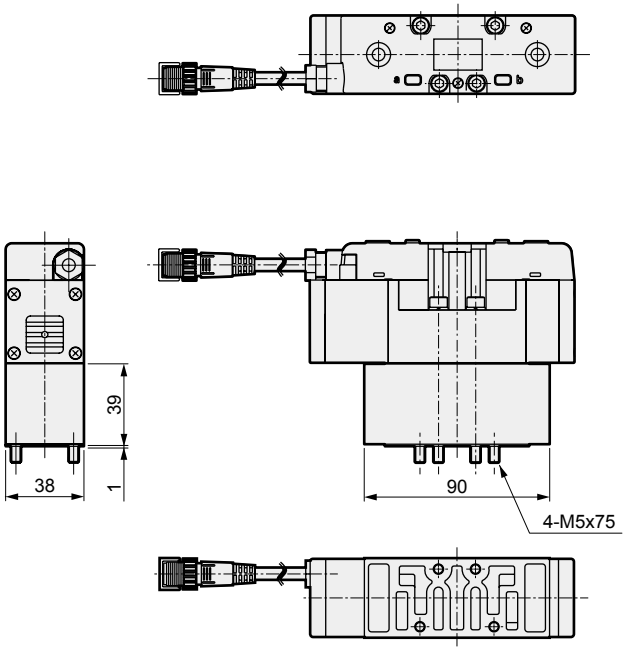

Dimensions: I/O connector (with sub-plate)

PV5-6R-FG-S-*

● 2-position single

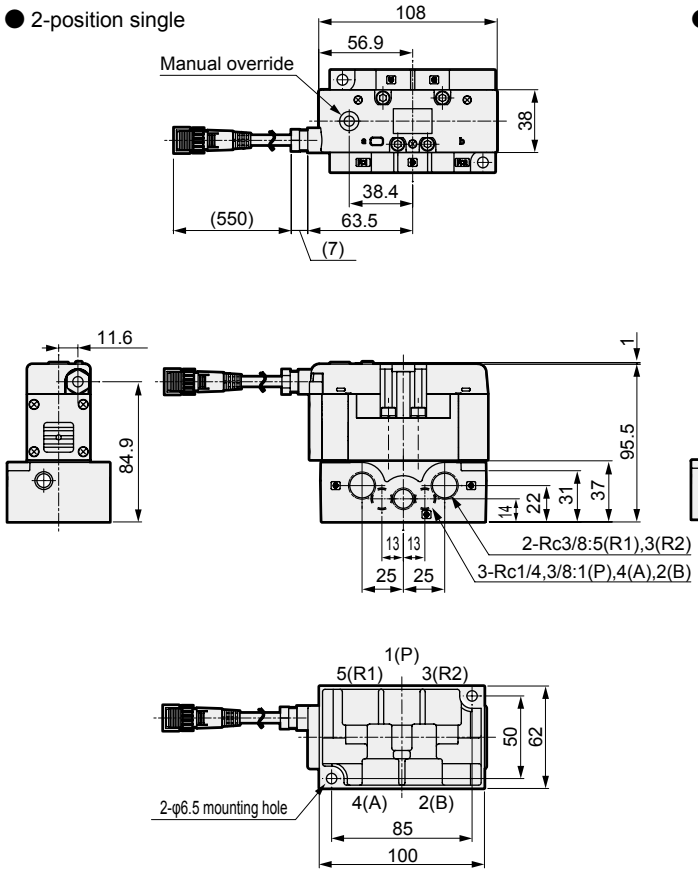

PV5-6R-FG-D-*

● 2-position double

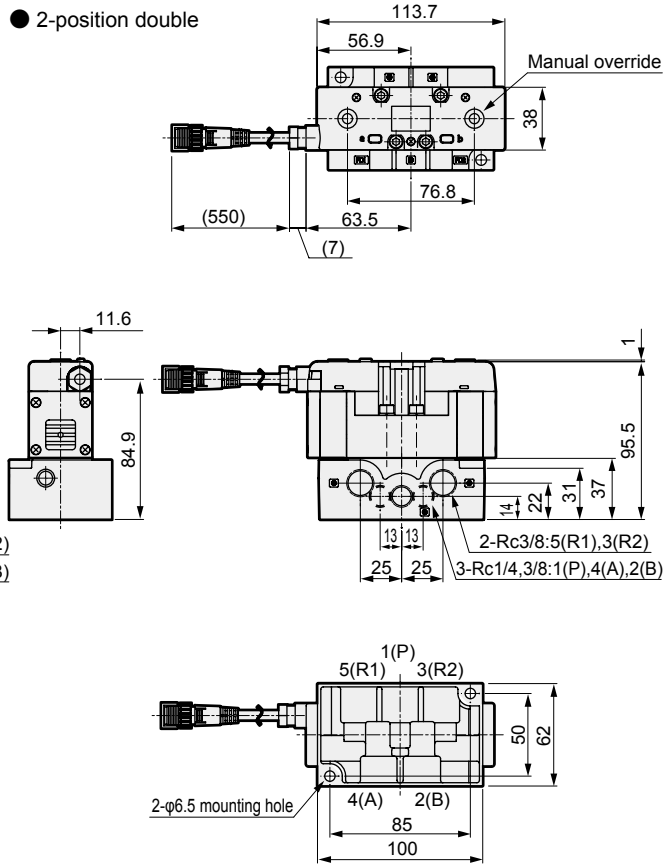

PV5-6R-FHG-D-*
PV5-6R-FJG-D-*
PV5-6R-FIG-D-*

● 3-position

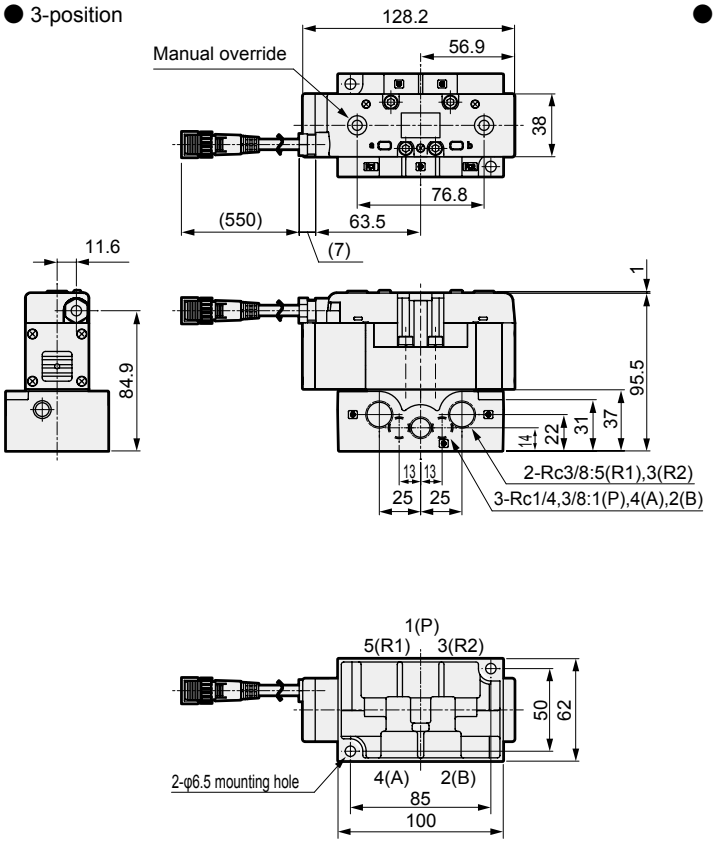

● Sub-plate dimensions

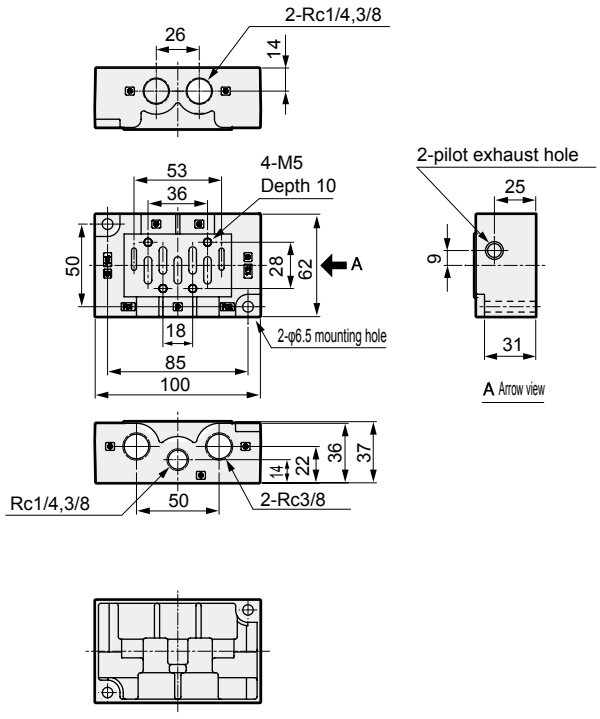

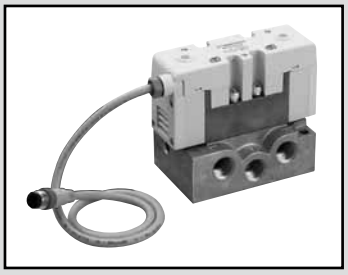

Single valve ISO size 2
I/O connector
Pilot operated 5-port ISO valve

PV5-8R Series

● Cylinder bore size: max. φ160

JIS symbol

● 5-port valve

2-position single (FG-S)

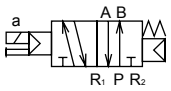

2-position double (FG-D)

3-position all ports closed (FHG)

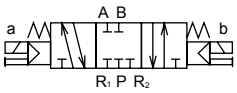

3-position all ports closed Non-leaking (FPG)

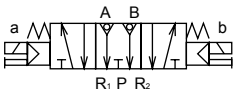

3-position A/B/R connection (FJG)

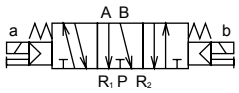

3-position P/A/B connection (FIG)

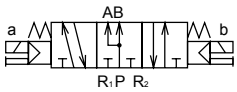

Common specifications

Descriptions	Content
Valve and operation	Pilot operated soft spool valve
Working fluid	Compressed air
Max. working pressure MPa	1.0 (≈150 psi, 10 bar)
Min. working pressure MPa	0.15 (≈22 psi, 1.5 bar) 0.20 (≈29 psi, 2 bar) (3-position)
Proof pressure MPa	1.50 (≈220 psi, 15 bar)
Ambient temperature °C	-5 (23°F) to 60 (140°F) (no freezing)
Fluid temperature °C	5 (41°F) to 60 (140°F)
Lubrication	Not required
Degree of protection	Dust proof/jet proof (IP65 or equivalent)
Leakage cm^3/min (A, B→R port)	10 (ANR) or less 3-position all ports closed non-leaking only 0.3 (ANR) or less *1
Vibration resistance m/s^2	50 or less
Shock resistance m/s^2	300 or less
Atmosphere	Cannot be used in corrosive gas environment.

*1: The initial value is listed.

Electrical specifications

Descriptions	Content
Rated voltage V DC	24
Voltage fluctuation range	±10%
Power consumption W (Current value A)	1.2 (0.050) * Value for models with lamp.
Thermal class	B (molded coil)
Wiring method	I/O connector

Individual specifications

Descriptions			PV5-8R
Port size *1			Rc3/8, Rc1/2, Rc3/4
Response time ms *2	2-position	Single	40 (ON), 60 (OFF)
		Double	40
	3-position		40 (when ON), 60 (when neutral)
Weight kg *3	2-position	Single	0.62
		Double	0.66
	3-position	Other than non-leaking	0.69
		All ports closed non-leaking	1.34

*1: As G and NPT threads can also be used for piping port screws, contact CKD for details.
*2: The response time is the value at 0.5 MPa working pressure, with no lubrication. It depends on the pressure and the lubricant quality.
*3: The weight listed is the weight without the sub-plate.

Flow characteristics

Model No.	Port size	Solenoid position	P→A/B C [dm^3/(s·bar)]	P→A/B b	A/B→R1/R2 C [dm^3/(s·bar)]	A/B→R1/R2 b
PV5-8R	Rc3/8	2-position single	10.7	0.17	13.0	0.19
		2-position double	10.7	0.17	13.0	0.19
		3-position all ports closed	10.0	0.16	11.0	0.25
		3-position A/B/R connection	9.9	0.14	13.0	0.16
		3-position P/A/B connection	11.0	0.12	12.0	0.21
		3-position all ports closed non-leaking	6.6	-	6.2	-

*1: Effective cross-sectional area S and sonic conductance C are converted as S ≈ 5.0 x C.

Coolant proof specifications

Select the option “A” of item Ⓑ in How to order on page 1473.

How to order I/O connector

● ISO size 2

PV5 - **8R** - **FG-S** - ( ) - **A03** - **TC**

- PV5: Model No.
- 8R: ISO size 2
- TC: NPN, PNP common
- FG-S: Ⓐ Solenoid position
- A03: Ⓒ With/without sub-plate and port size

Code	Content		Model No. PV5-8R
Ⓐ Solenoid position			
FG-S	P pressurized	2-position single	●
FG-D		2-position double	●
FHG-D		3-position all ports closed	●
FJG-D		3-position ABR connection	●
FIG-D		3-position PAB connection	●
FPG-D		3-position all ports closed non-leaking	●
Ⓑ Option			
Blank	None		●
A	Coolant proof		●
Ⓒ With/without sub-plate and port size			
Blank	Without sub-plate		●
A03	Side piping Rc3/8 (Rc1/2 for R port only)		●
A04	Side piping (Rc1/2)		●
A06	Side piping (Rc3/4)		●

[Example of model No.]

PV5-8R-FG-S-A03-TC

Model: PV5/ISO size 2 (I/O connector)

Ⓐ Solenoid position : P pressurized 2-position single solenoid

Ⓒ Sub-plate port size : side piping Rc3/8
R port Rc1/2

● Remarks

Descriptions	Content
(1) Wiring method	I/O connector (M12) NPN, PNP common
(2) Voltage	24 VDC
(3) Surge suppressor/lamp	Standard with surge suppressor and indicator lamp

*1: Refer to page 1436 for the circuit diagram with a surge suppressor/lamp.

ISO size 2 sub-plate specifications and how to order

CB2 - **A03**

- A03: Ⓐ Piping connection method

Code	Type	P/A/B port	R1/R2 port	Weight (kg)
Ⓐ Piping connection method				
A03	Side piping	Rc3/8	Rc1/2	0.49
A04		Rc1/2		
A06		Rc3/4	Rc3/4	1.40

4GA/B
M4GA/B
MN4GA/B
4GA/B (mastr)
4GD/E
M4GD/E
MN4GD/E
4GA4/B4
MN3E MN4E
W4GA/B2
W4GB4
4TB
4L2-4/ LMF0
MN3S0 MN4S0
4SA/B0
4KA/B
4KA/B (mastr)
4F
4F (mastr)
PV5G GMF
PV5 GMF
PV5S-0
3QR 3QB
MV3QR
3MA/B0
3PA/B
P/M/B
NP/NAP/ NVP
4F*0EX
4F*0E
HMV HSV
2QV 3QV
SKH
PCD
Silencer
TotAirSys (Total Air)
TotAirSys (Gamma)
Ending

Internal structure and parts list: I/O connector

PV5-8R-FG-S

● 2-position single

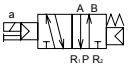

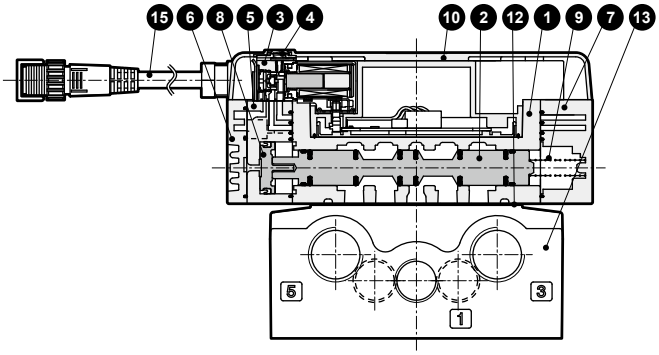

PV5-8R-FG-D

● 2-position double

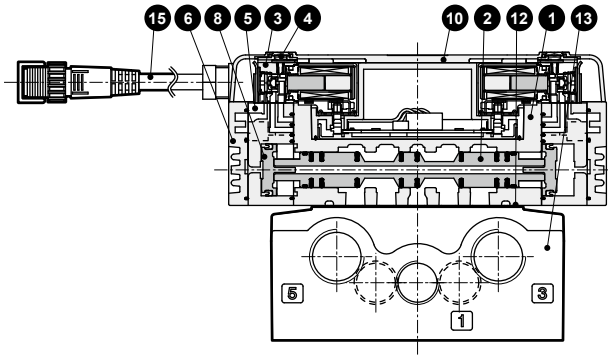

PV5-8R-FHG-D

● 3-position all ports closed

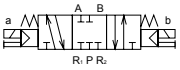

PV5-8R-FJG-D

● 3-position A/B/R connection

PV5-8R-FIG-D

● 3-position P/A/B connection

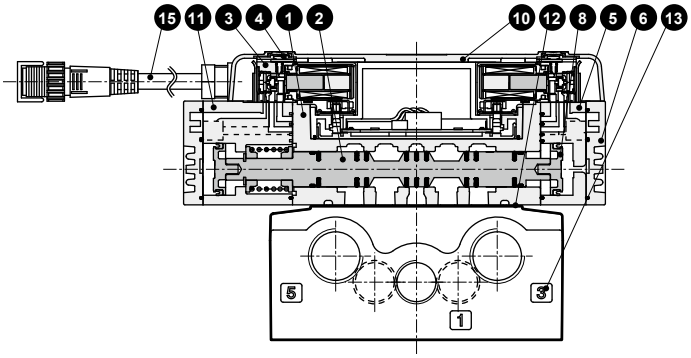

PV5-8R-FPG-D

● 3-position all ports closed

Non-leaking

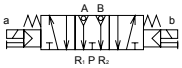

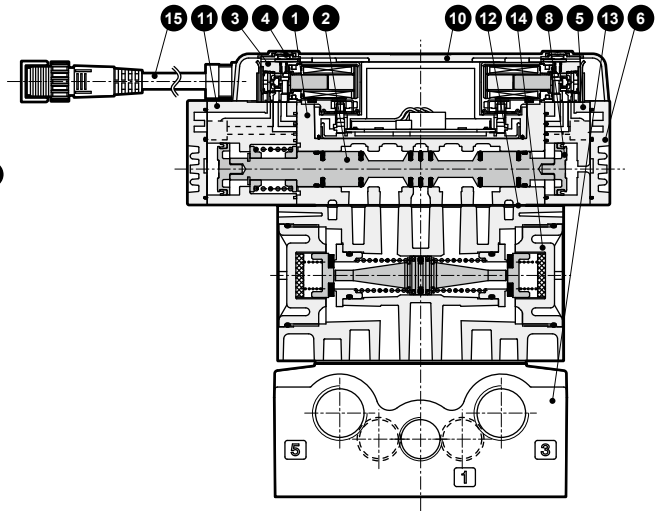

Main parts list

No.	Part name	Material	No.	Part name	Material
1	Body	Aluminum alloy die-casting	9	Spring S	-
2	Spool assembly	-	10	Wiring cover	Resin
3	Pilot valve	-	11	Pilot valve assembly for 3-position	Resin
4	Manual override	-	12	Gasket	-
5	Pilot valve assembly for double	Resin	13	Sub-plate	Aluminum alloy die-casting
6	Cap D	Resin	14	Air pilot check valve	-
7	Cap S	Resin	15	I/O cable assembly	-
8	Piston D assembly	-			

MEMO

4GA/B
M4GA/B
MN4GA/B
4GA/B (mastr)
4GD/E
M4GD/E
MN4GD/E
4GA4/B4
MN3E MN4E
W4GA/B2
W4GB4
4TB
4L2-4/ LMF0
MN3S0 MN4S0
4SA/B0
4KA/B
4KA/B (mastr)
4F
4F (mastr)
PV5G GMF
PV5 GMF
PV5S-0
3QR 3QB
MV3QR
3MA/B0
3PA/B
P/M/B
NP/NAP/ NVP
4F*0EX
4F*0E
HMV HSV
2QV 3QV
SKH
PCD
Silencer
TotAirSys (Total Air)
TotAirSys (Gamma)
Ending

Dimensions: I/O connector (without sub-plate)

PV5-8R-FG-S

● 2-position single

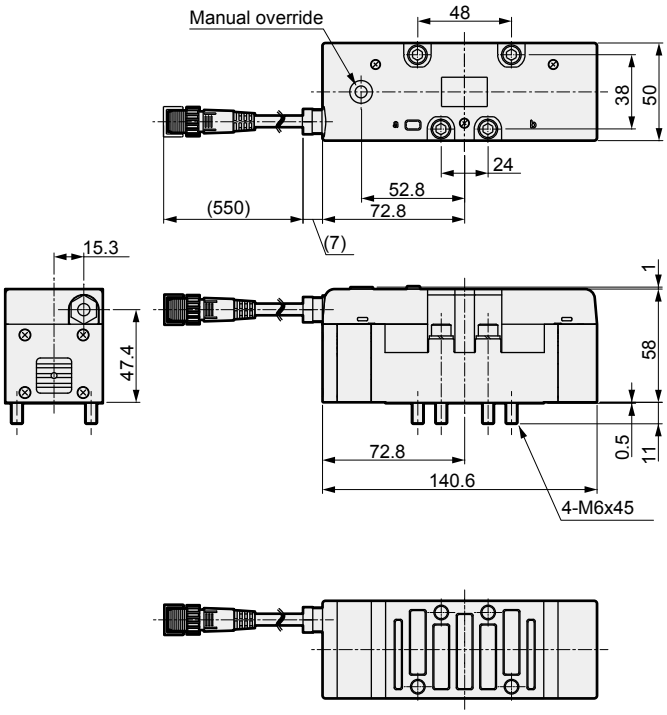

PV5-8R-FG-D

● 2-position double

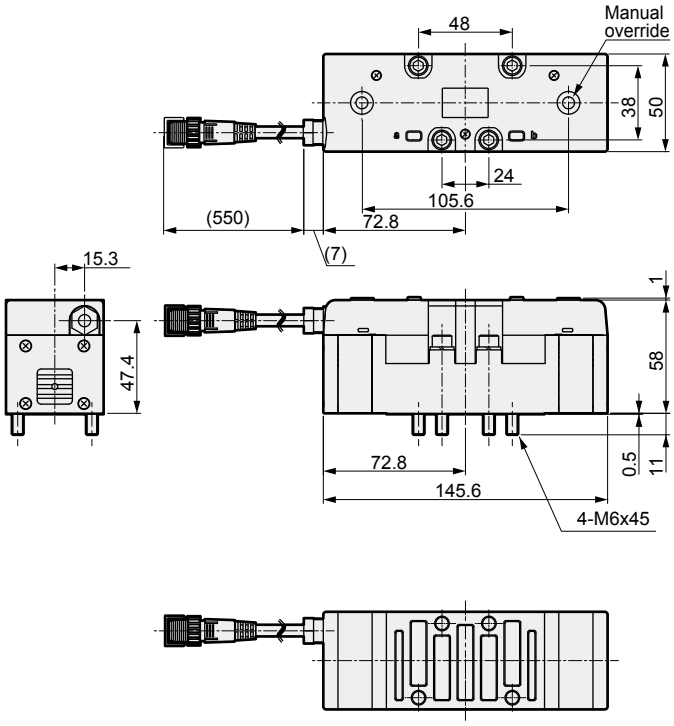

PV5-8R-FHG-D
PV5-8R-FJG-D
PV5-8R-FIG-D

● 3-position

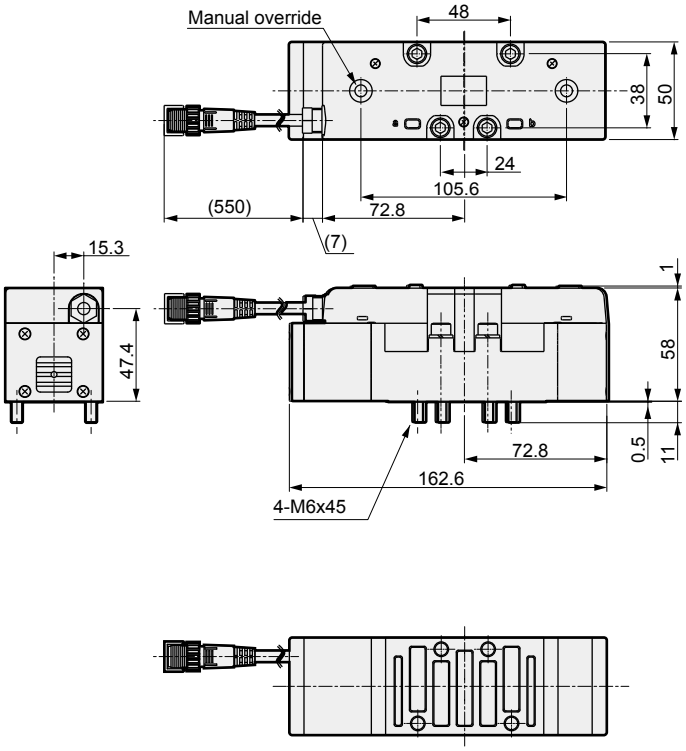

PV5-8R-FPG-D

● 3-position/non-leaking

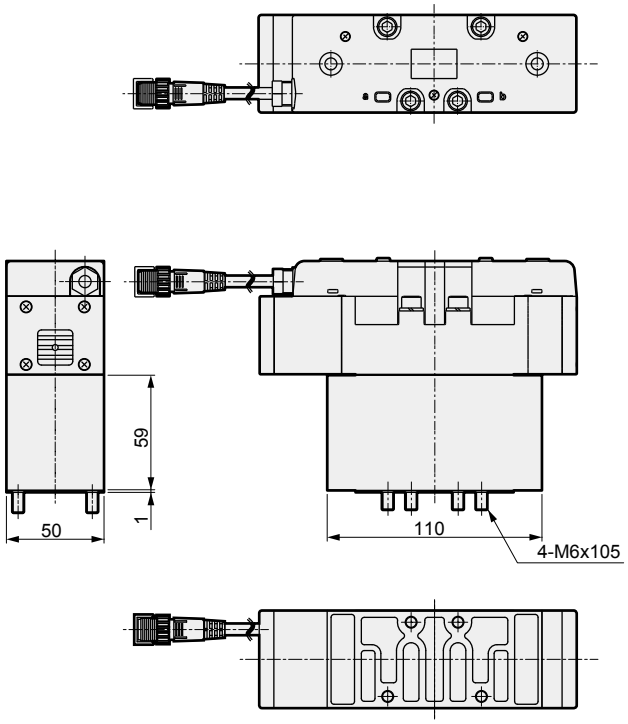

Dimensions: I/O connector (with sub-plate)

PV5-8R-FG-S-*

● 2-position single

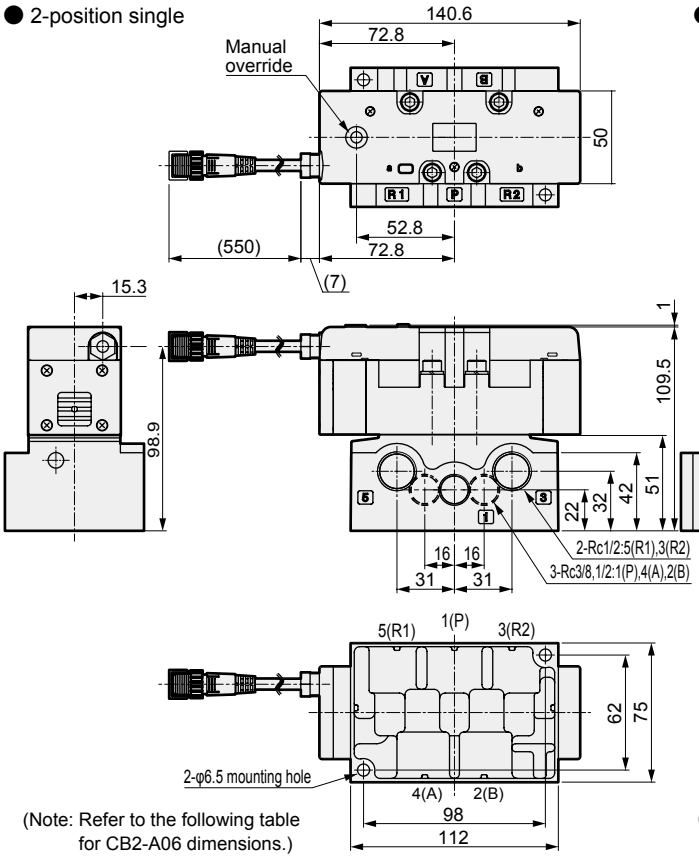

(Note: Refer to the following table for CB2-A06 dimensions.)

PV5-8R-FG-D-*

● 2-position double

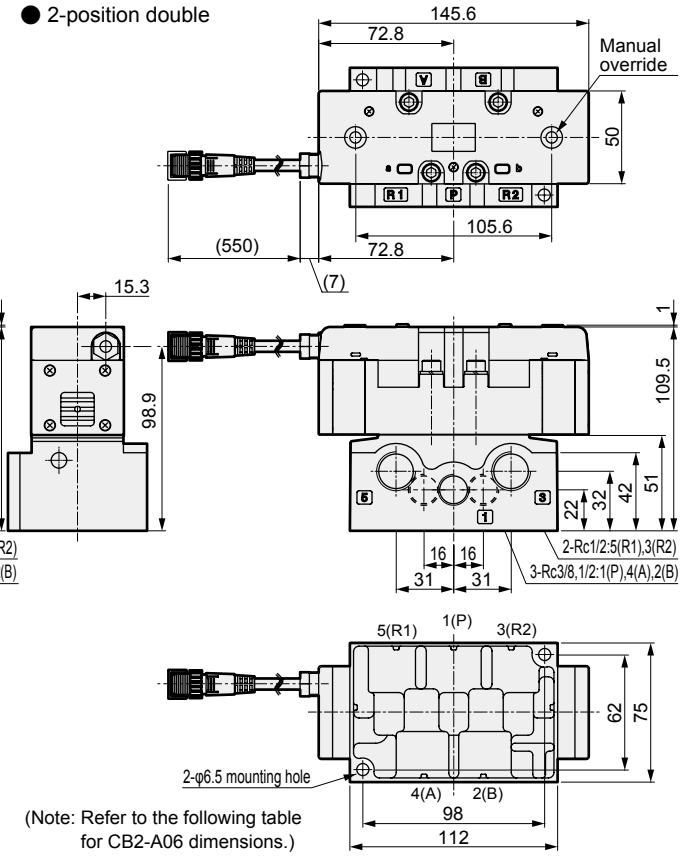

(Note: Refer to the following table for CB2-A06 dimensions.)

PV5-8R-FHG-D-*
PV5-8R-FJG-D-*
PV5-8R-FIG-D-*

● 3-position

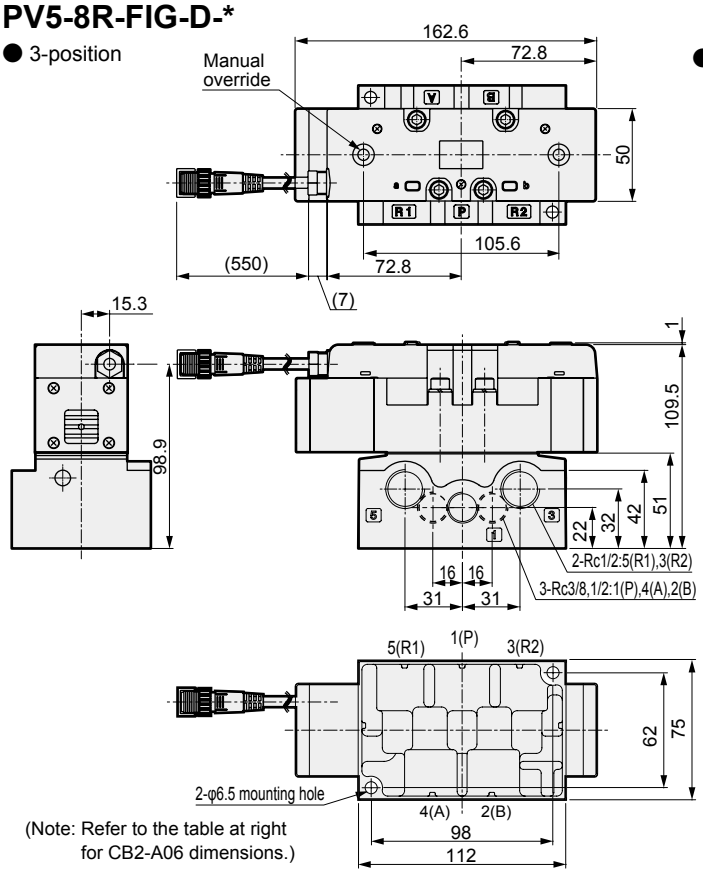

(Note: Refer to the table at right for CB2-A06 dimensions.)

● Sub-plate dimensions (CB2-*)

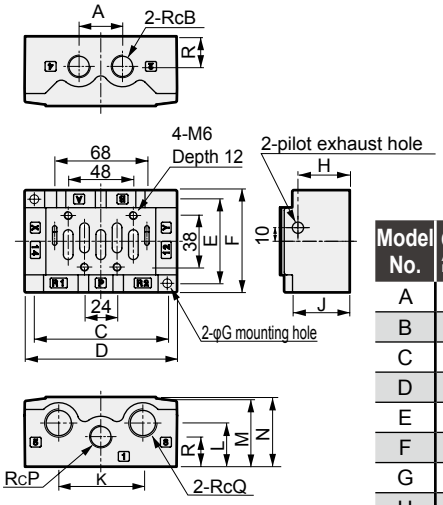

Model No.	CB2-03	CB2-04	CB2-06
A	32		40
B	3/8	1/2	3/4
C	98		128
D	112		142
E	62		72
F	75		86
G	6.5		7.5
H	38		53
J	42		55
K	62		84
L	32		42
M	50		62
N	51		63
P	3/8	1/2	3/4
Q	1/2		3/4
R	22		30

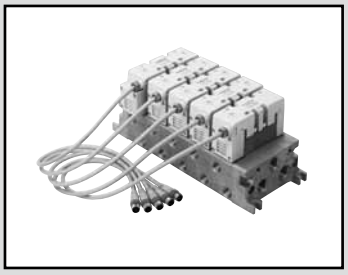

Individual wiring manifold ISO size 1
I/O connector
Pilot operated 5-port ISO valve

GMF1 Series

● Cylinder bore size: max. φ100

RoHS

Common specifications

Descriptions	Content
Manifold method	Manifold integrated
Manifold	Common supply/common exhaust Common supply/individual exhaust Individual supply/common exhaust Individual supply/individual exhaust Different pressure supply
Station No.	1 to 10 stations
Valve and operation	Pilot operated soft spool valve
Working fluid	Compressed air
Max. working pressure MPa	1.0 (≈150 psi, 10 bar)
Min. working pressure MPa	0.15 (≈22 psi, 1.5 bar) 0.20 (≈29 psi, 2 bar) (3-position)
Proof pressure MPa	1.50 (≈220 psi, 15 bar)
Ambient temperature °C	-5 (23°F) to 60 (140°F) (no freezing)
Fluid temperature °C	5 (41°F) to 60 (140°F)
Lubrication	Not required
Degree of protection	Dust proof/jet proof (IP65 or equivalent)
Leakage cm^3/min (A, B→R port)	10 (ANR) or less 3-position all ports closed non-leaking only 0.3 (ANR) or less *1
Vibration resistance m/s^2	50 or less
Shock resistance m/s^2	300 or less
Atmosphere	Cannot be used in corrosive gas environment.

*1: The initial value is listed.

Electrical specifications

Descriptions		Content
Rated voltage V	DC	24
Voltage fluctuation range		±10%
Power consumption W (Current value A)		1.2 (0.050) * Value for models with a lamp.
Thermal class		B (molded coil)
Wiring method		I/O connector

Individual specifications

Descriptions			GMF1
Port size *1	P/R1/R2 port		Rc3/8, Rc1/2
	A/B port		Rc1/4, Rc3/8
Response time *2 ms	2-position	Single	30 (ON), 40 (OFF)
		Double	30
	3-position		30 (when ON), 50 (when neutral)

*1: As G and NPT threads can also be used for piping port screws, contact CKD for details.
*2: The response time is the value at 0.5 MPa working pressure, with no lubrication.
It depends on the pressure and the lubricant quality.

Weight

Manifold base	Station No.	1	2	3	4	5	6	7	8	9	10
(kg)		1.04	1.50	1.95	2.40	2.85	3.30	3.75	4.20	4.65	5.10
Silencer box	Model No.	SB									
Added to manifold base assembly (kg)		0.13									
Spacer	Model No.	P		R		SR		PC			
(kg)		0.22		0.22		0.64		0.25			

Flow characteristics

Model No.	Port size	Solenoid position	P→A/B C [dm^3/(s·bar)]	P→A/B b	A/B→R1/R2 C [dm^3/(s·bar)]	A/B→R1/R2 b
GMF1	Rc1/4	2-position single	4.8	0.25	5.2	0.26
		2-position double	4.8	0.25	5.2	0.26
		3-position all ports closed	4.4	0.27	4.7	0.27
		3-position A/B/R connection	4.4	0.25	5.3	0.25
		3-position P/A/B connection	4.8	0.27	4.7	0.27
		3-position all ports closed non-leaking	3.2	-	2.8	-

*1: Effective cross-sectional area S and sonic conductance C are converted as S ≈ 5.0 x C.

How to order I/O connector

● ISO Size 1

GMF 1 5 - 02 L - HY1 B DU - SB F - ○○

- Model No.
- Ⓐ Station No.
- Ⓑ A/B port size *1
- Ⓒ A/B port position *2
- Ⓓ P/R port size
- Ⓔ P/R port position *3 *4
- Ⓕ HY configuration
- Ⓖ Silencer box
- Ⓗ Option
- Quantity of port size 02 of A/B port
- Quantity of port size 03 of A/B port

Code	Content	Model No. GMF1
Ⓐ Station No.		
1	1 station	●
to	to	
10	10 stations	
Ⓑ A/B port size		
02	Rc1/4	●
03	Rc3/8	●
HX1	Rc1/4 and Rc3/8 mixture	●
Ⓒ A/B port position		
Blank	Right	●
L	Left and right sides (select position with manifold specifications)	●
H	Left	●
Z	Rear side	●
T	Free selection (plug attached) (rear side not available)	●
Ⓓ P/R port size		
03	Rc3/8	●
04	Rc1/2	●
HY1	Rc3/8 and Rc1/2 mixture	●
Ⓔ P/R port position		
B	Top and bottom sides	●
D	Bottom side	●
U	Top side	●
E	P on top, R on bottom	●
F	P on bottom, R on top	●
T	Free selection (plug attached)	●
Ⓕ HY configuration		
Blank	When other than HY1 is selected with Ⓓ	●
DU	Rc3/8 on bottom, Rc1/2 on top	●
UD	Rc3/8 on top, Rc1/2 on bottom	●
Ⓖ Silencer box		
Blank	None	●
SB	Yes (D side installation)	●
Ⓗ Option		
Blank	None	●
F	P/A/B port filter integrated	●

⚠ Precautions for model No. selection

*1: HX is a mixture of bore sizes. Contact CKD for details.
*2: The instructions of Ⓒ indicate the port positions.
Those other than the instructions will all be plugs.
*3: The instructions of Ⓔ indicate the port positions.
The opposite side of the instructions will be plugs.
*4: When Ⓖ is with silencer box,this will be position selection for the P-port which can be selected from B, D, U, and T.
The R port is assembled with a plug for both the top and bottom.

[Example of model No.]

GMF15-02L-HY1BDU-SBF

Model: Manifold ISO size 1

Ⓐ Station No. : 5 stations
Ⓑ Ⓒ A/B port : Rc1/4 (left and right both sides piping)
Ⓓ Ⓔ Ⓕ P/R port : Rc3/8 and Rc1/2 mixture (Rc3/8 for bottom side piping and Rc1/2 for top side piping)
Ⓖ Silencer box : Yes (D side installation)
Ⓗ Option : P/A/B-port filter integrated

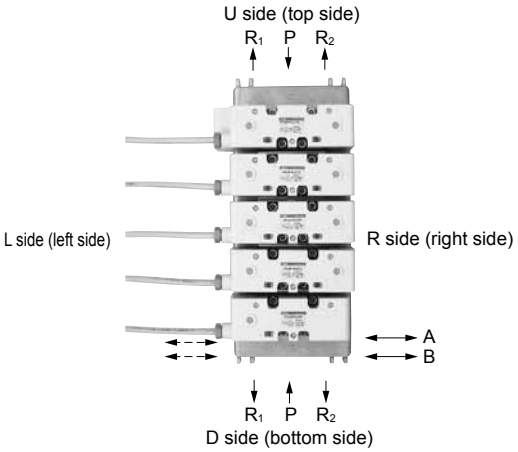

The valve body must be prepared separately. For how to order valves, refer to page 1467. For arrangement of manifolds with valve bodies, **the manifold specifications sheet** on page 1490 **will be necessary** in addition to each model No.

Dimensions: I/O connector

GMF1

● Common exhaust

P/R port size	A	B
Rc3/8	18.4	23.5
Rc1/2	22.4	22.5

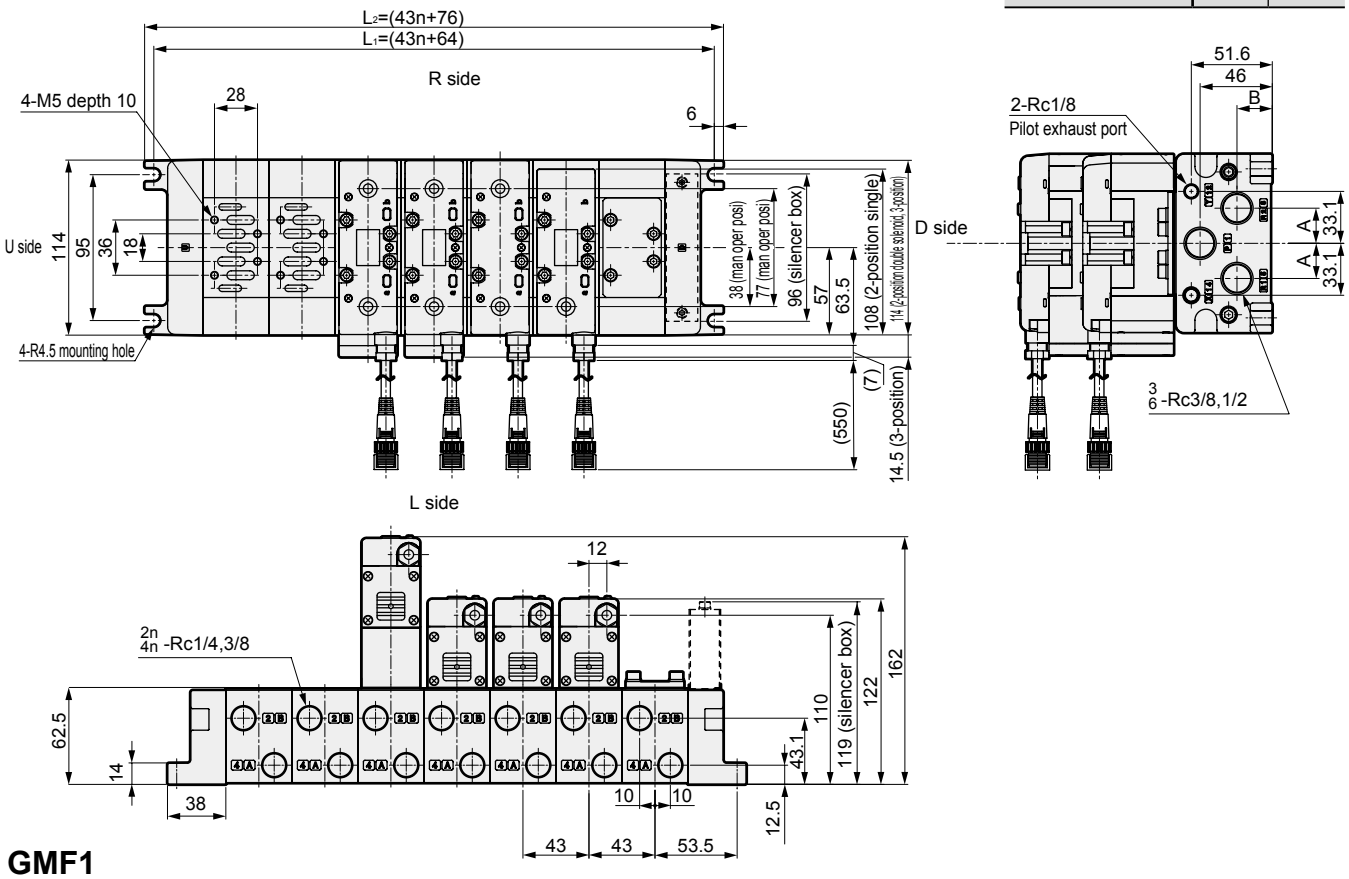

GMF1

● Individual exhaust

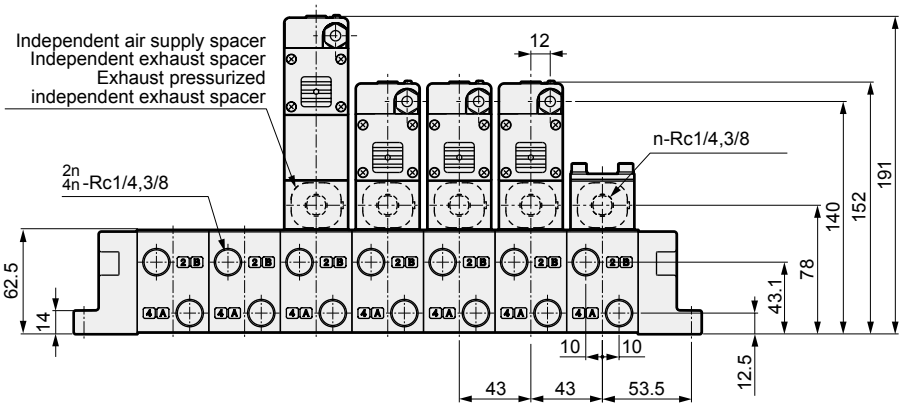

GMF1

● Rear piping

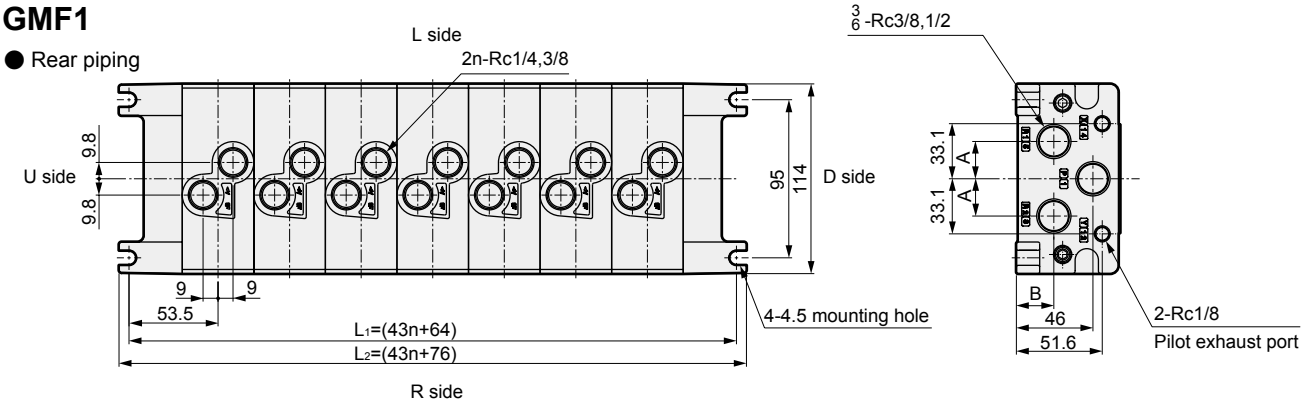

How to order

● Spacer regulator

CMF 1 -SR- A - T05 C

Ⓐ Size	
1	ISO size 1

Ⓑ Press reduction port position	
P	P port
A	A port
B	B port

Ⓒ Pressure gauge	
T05	MPa display (With limit marker)

Ⓓ Check valve	
Blank	None
C	Yes

List without check valve (blank) for SR-P and list with check valve (C) for SR-A and SR-B.

* Note that the direction of the pressure gauge is different with **CMF1-SR-A-T05C**.

CMF1-SR-P-T05
CMF1-SR-B-T05C

● Spacer regulator

● JIS symbol

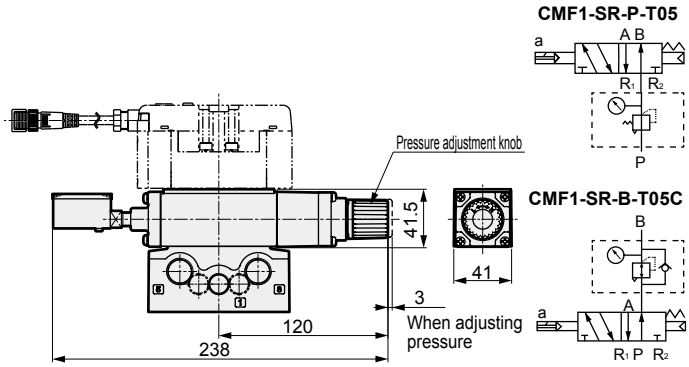

CMF1-SR-A-T05C

● JIS symbol

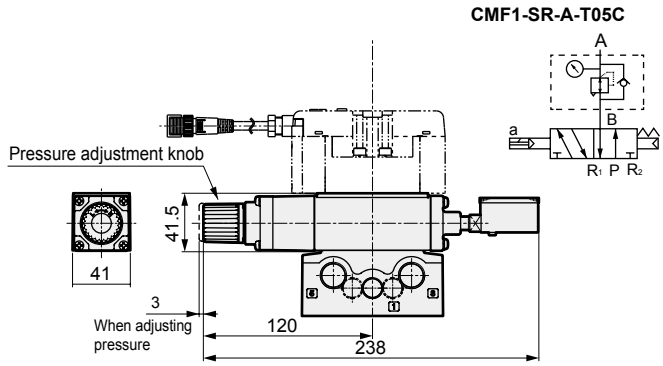

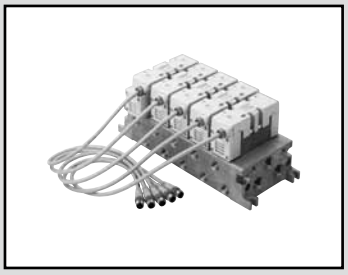

Individual wiring manifold ISO size 2
I/O connector
Pilot operated 5-port ISO valve

GMF2 Series

● Cylinder bore size: max. φ160

RoHS

Common specifications

Descriptions	Content
Manifold method	Manifold integrated
Manifold	Common supply/common exhaust Common supply/individual exhaust Individual supply/common exhaust Individual supply/individual exhaust Different pressure supply
Station No.	1 to 10 stations
Valve and operation	Pilot operated soft spool valve
Working fluid	Compressed air
Max. working pressure MPa	1.0 (≈150 psi, 10 bar)
Min. working pressure MPa	0.15 (≈22 psi, 1.5 bar) 0.20 (≈29 psi, 2 bar) (3-position)
Proof pressure MPa	1.50 (≈220 psi, 15 bar)
Ambient temperature °C	-5 (23°F) to 60 (140°F) (no freezing)
Fluid temperature °C	5 (41°F) to 60 (140°F)
Lubrication	Not required
Degree of protection	Dust proof/jet proof (IP65 or equivalent)
Leakage cm^3/min (A, B→R port)	10 (ANR) or less 3-position all ports closed non-leaking only 0.3 (ANR) or less *1
Vibration resistance m/s^2	50 or less
Shock resistance m/s^2	300 or less
Atmosphere	Cannot be used in corrosive gas environment.

*1: The initial value is listed.

Electrical specifications

Descriptions		Content
Rated voltage V	DC	24
Voltage fluctuation range		±10%
Power consumption W (Current value A)		1.2 (0.050) * Value for models with lamp.
Thermal class		B (molded coil)
Wiring method		I/O connector

Individual specifications

Descriptions			GMF1
Port size *1	P/R1/R2 port		Rc1/2, Rc3/4
	A/B port		Rc3/8, Rc1/2
Response time *2 ms	2-position	Single	40 (ON), 60 (OFF)
		Double	40
	3-position		40 (when ON), 60 (when neutral)

*1: As G and NPT threads can also be used for piping port screws, contact CKD for details.
*2: The response time is the value at 0.5 MPa working pressure, with no lubrication.
It depends on the pressure and the lubricant quality.

Weight

Manifold base	Station No.	1	2	3	4	5	6	7	8	9	10
(kg)		2.30	3.17	4.04	4.91	5.79	6.66	7.53	8.40	9.27	10.14
Silencer box	Model No.	SB									
Added to manifold base assembly (kg)		0.17									
Spacer	Model No.	P		R		SR		PC			
(kg)		0.41		0.41		1.18		0.54			

Flow characteristics

Model No.	Port size	Solenoid position	P→A/B		A/B→R1/R2	
			C [dm^3/(s·bar)]	b	C [dm^3/(s·bar)]	b
GMF2	Rc3/8	2-position single	9.7	0.12	11.0	0.14
		2-position double	9.7	0.12	11.0	0.14
		3-position all ports closed	9.2	0.12	10.1	0.15
		3-position A/B/R connection	9.2	0.11	11.6	0.11
		3-position P/A/B connection	9.6	0.11	10.2	0.18
		3-position all ports closed non-leaking	6.2	-	5.9	-

*1: Effective cross-sectional area S and sonic conductance C are converted as S ≈ 5.0 x C.

How to order I/O connector

● ISO size 2

GMF 2 5 - 03 L - 04 B ☐ - SB F - ☐ ☐

- GMF: Model No.
- 5: Ⓐ Station No.
- 03: Ⓑ A/B port size *1
- L: Ⓒ A/B port position *2
- 04: Ⓓ P/R port size
- B: Ⓔ P/R port position *3 *4
- SB: Ⓖ Silencer box
- F: Ⓕ HY configuration
- ☐: Quantity of port size 03 of A/B port
- ☐: Quantity of port size 04 of A/B port
- Ⓗ Option

Code	Content	Model No. GMF2
Ⓐ Station No.		
1	1 station	●
to	to	●
10	10 stations	●
Ⓑ A/B port size		
03	Rc3/8	●
04	Rc1/2	●
HX2	Rc3/8 and Rc1/2 mixture	●
Ⓒ A/B port position		
Blank	Right	●
L	Left and right sides (select position with manifold specifications)	●
H	Left	●
Z	Rear side	●
T	Free selection (plug attached) (rear side not available)	●
Ⓓ P/R port size		
04	Rc1/2	●
06	Rc3/4	●
HY2	Rc1/2 and Rc3/4 mixture	●
Ⓔ P/R port position		
B	Top and bottom sides	●
D	Bottom side	●
U	Top side	●
E	P on top, R on bottom	●
F	P on bottom, R on top	●
T	Free selection (plug attached)	●
Ⓕ HY configuration		
Blank	When other than HY2 is selected with Ⓓ	●
DU	Rc1/2 on bottom, Rc3/4 on top	●
UD	Rc1/2 on top, Rc3/4 on bottom	●
Ⓖ Silencer box		
Blank	None	●
SB	Yes (D side installation)	●
Ⓗ Option		
Blank	None	●
F	P/A/B port filter integrated	●

The valve body must be prepared separately. For how to order valves, refer to page 1473. For arrangement of manifolds with valve bodies, **the manifold specifications sheet** on page 1491 **will be necessary** in addition to each model No.

⚠ Precautions for model No. selection

*1: HX is a mixture of bore sizes. Contact CKD for details.
*2: The instructions of Ⓒ indicate the port positions. Those other than the instructions will all be plugs.
*3: The instructions of Ⓔ indicate the port positions. The opposite side of the instructions will be plugs.
*4: When Ⓖ is with silencer box, this will be position selection for the P-port which can be selected from B, D, U, and T. The R port is assembled with a plug for both the top and bottom.

[Example of model No.]

GMF25-03L-04B-SBF

Model: Manifold ISO size 2

Ⓐ Station No. : 5 stations
ⒷⒸ A/B port : Rc3/8 (left and right both sides piping)
ⒹⒺ P/R port : Rc1/2 (top and bottom both sides piping)
Ⓖ Silencer box : Yes (D side installation)
Ⓗ Option : P/A/B-port filter integrated

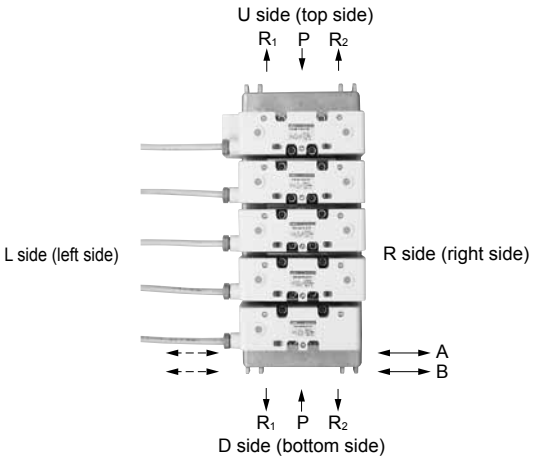

Dimensions: I/O connector

GMF2

● Common exhaust

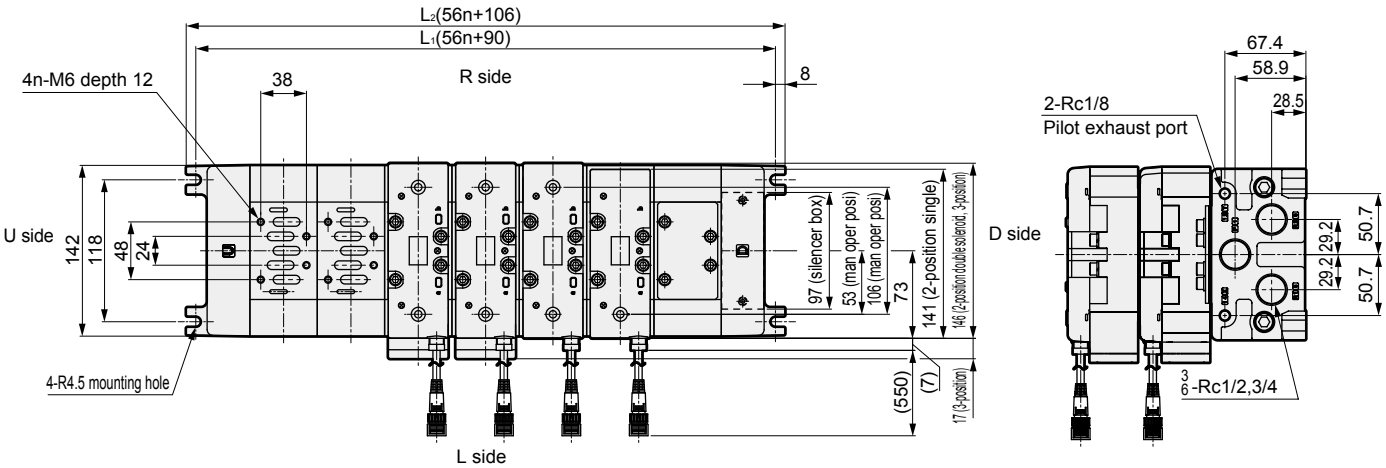

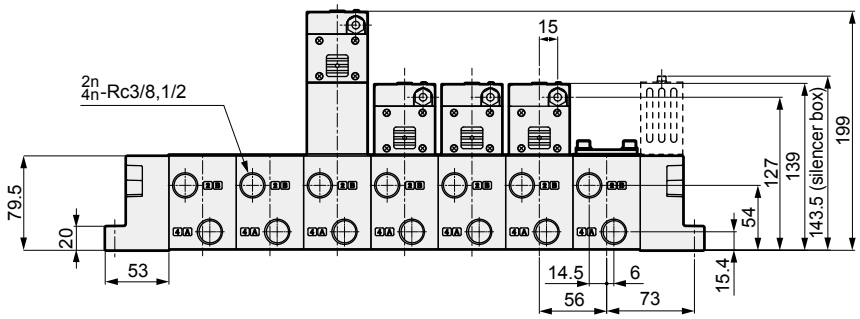

GMF2

● Individual exhaust

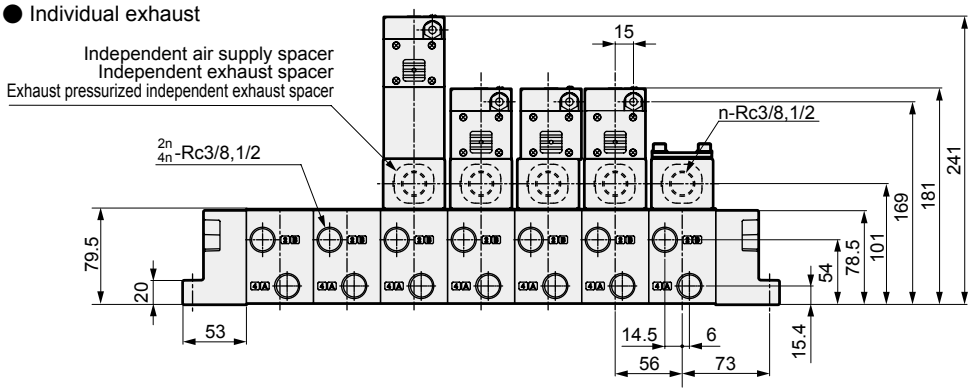

GMF2

● Rear piping

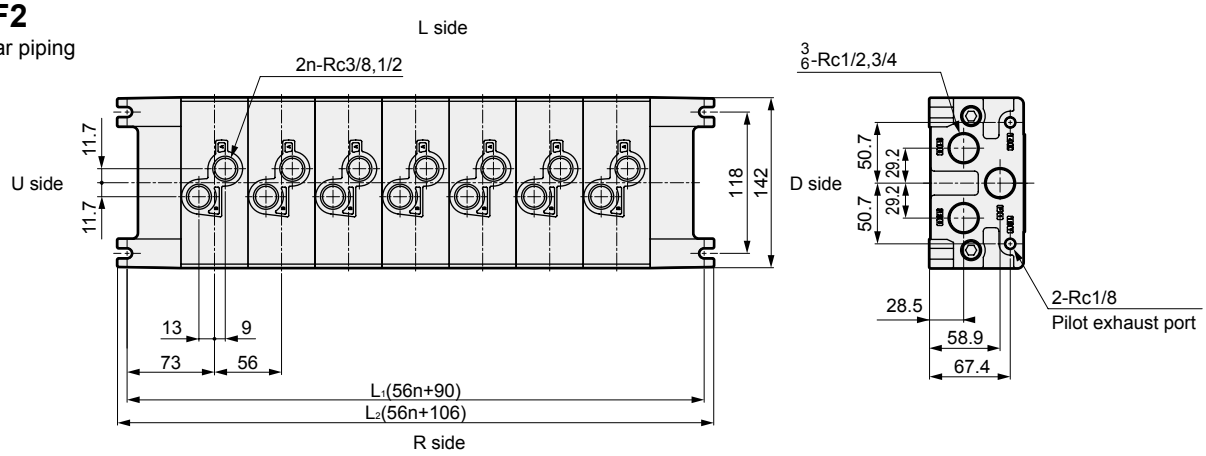

How to order

● Spacer regulator

CMF 2 - SR - A - T05 C

Ⓐ Size	
2	ISO size 2

Ⓑ Press reduction port position	
P	P port
A	A port
B	B port

Ⓒ Pressure gauge	
T05	MPa display (With limit marker)

Ⓓ Check valve	
Blank	None
C	Yes

SR-P is a check valve No (blank), list with check valve (C) for SR-A and SR-B.

* Note that the direction of the pressure gauge is different with **CMF2-SR-A-T05C**.

CMF2-SR-P-T05
CMF2-SR-B-T05C

● Spacer regulator

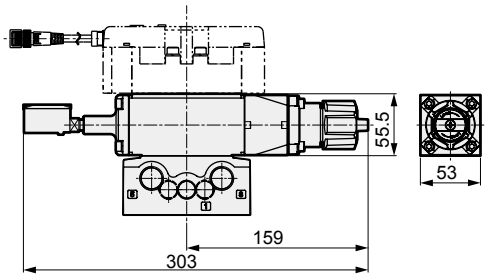

● JIS symbol

CMF2-SR-P-T05

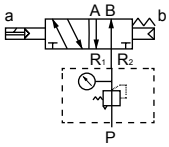

CMF2-SR-B-T05C

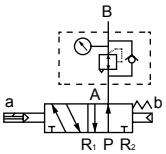

CMF2-SR-A-T05C

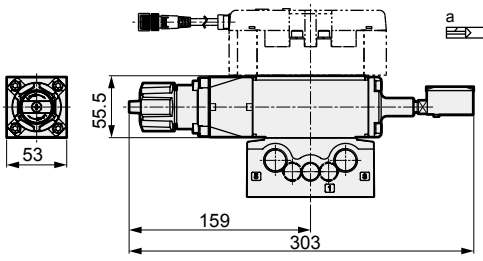

● JIS symbol

CMF2-SR-A-T05C

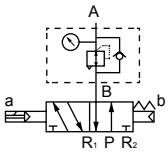

How to order I/O connector

GMFZ 5 - HX3 L - HY3 B DU F - ○ ○

- GMFZ: ISO size 1/2 mix manifolds
- 5: Ⓐ Station No.
- HX3: Ⓑ A/B port size
- L: Ⓒ A/B port position *1
- HY3: Ⓓ P/R port size
- B: Ⓔ P/R port position *2
- DU: Ⓕ HY configuration
- F: Ⓖ Option
- ○: Quantity of size 1
- ○: Quantity of size 2

Code	Content	Model No. GMFZ
Ⓐ Station No.		
2	2 stations	●
to	to	●
10	10 stations	●
Ⓑ A/B port size		
HX3	Size 1: 02/size 2: 03	●
HX4	Size 1: 02/size 2: 04	●
HX5	Size 1: 03/size 2: 03	●
HX6	Size 1: 03/size 2: 04	●
Ⓒ A/B port position		
Blank	Right	●
L	Left and right sides (select position with manifold specifications)	●
H	Left	●
Z	Rear side	●
T	Free selection (plug attached) (rear side not available)	●
Ⓓ P/R port size		
HY3	Size 1: 03/size 2: 04	●
HY4	Size 1: 03/size 2: 06	●
HY5	Size 1: 04/size 2: 04	●
HY6	Size 1: 04/size 2: 06	●
Ⓑ P/R port position		
B	Top and bottom sides	●
D	Bottom side	●
U	Top side	●
E	P on top, R on bottom	●
F	P on bottom, R on top	●
T	Free selection (plug attached)	●
Ⓕ HY configuration		
DU	Smaller bore size on bottom, larger bore size on top or 1 on bottom, 2 on top	●
UD	Smaller bore size on top, larger bore size on bottom or 1 on top, 2 on bottom	●
Ⓖ Option		
Blank	None	●
F	P/A/B port filter integrated	●

⚠ Precautions for model No. selection

*1: Instructions of Ⓒ will be port positions. Those other than the instructions will all be plugs.
*2: Instructions of Ⓔ will be port positions. The opposite side of the instructions will be plugs.

The valve body must be prepared separately. For how to order valves, refer to pages 1467 and 1473. For arrangement of manifolds with valve bodies, **the manifold specifications sheet** on page 1492 **will be necessary** in addition to each model No.

No	Descriptions	Model No.	Fig.	Remarks
1	ISO sizes 1/2 mix block	**GMFBZ-00L**	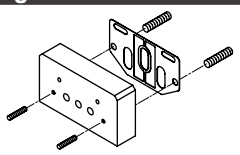	U side size 1 D side size 2 For mixed block With bolts and gasket
		GMFBZ-00R	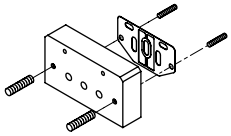	U side size 2 D side size 1 For mixed block With bolts and gasket

Mix manifold outline drawing

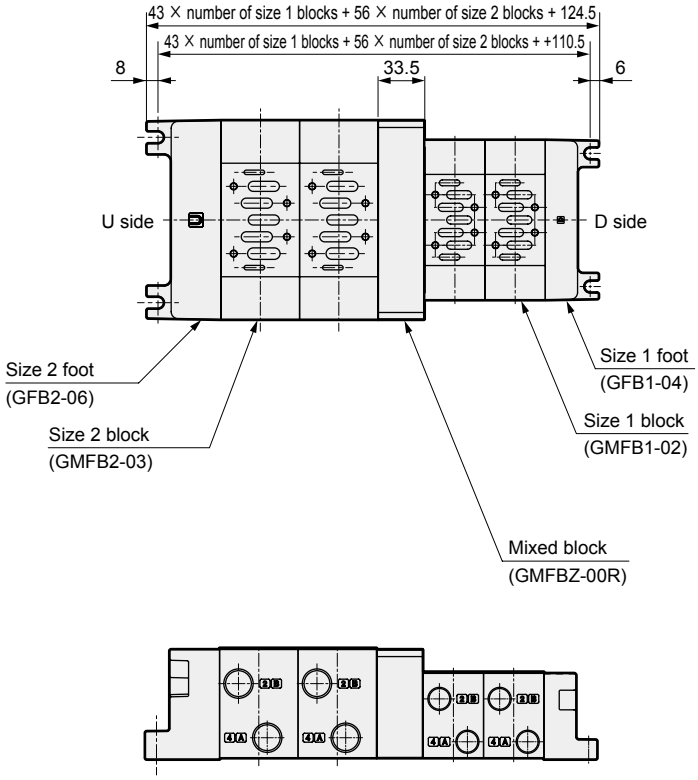

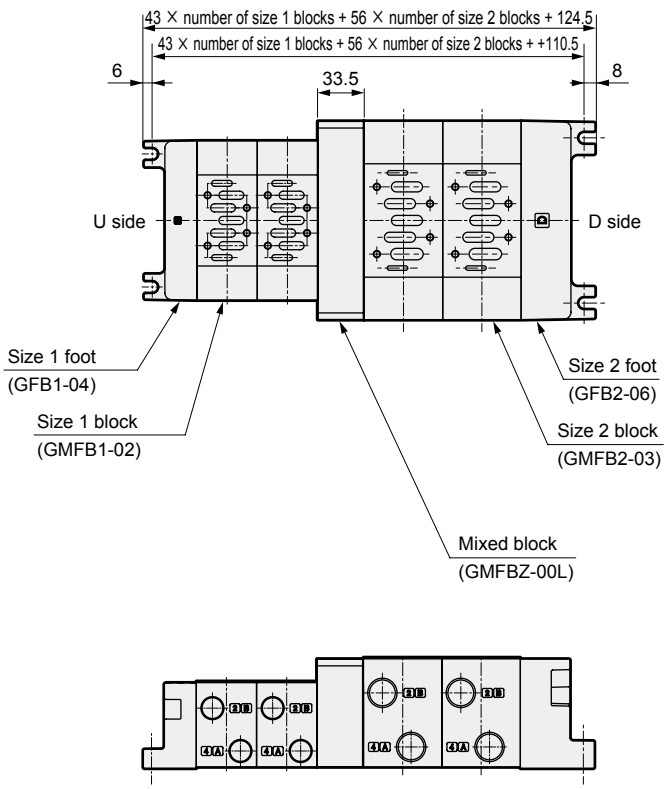

* The dimensions for the size 1/2 feet and the types of blocks are as listed on pages 1480 and 1484.

4GA/B
M4GA/B
MN4GA/B
4GA/B (mastr)
4GD/E
M4GD/E
MN4GD/E
4GA4/B4
MN3E MN4E
W4GA/B2
W4GB4
4TB
4L2-4/ LMF0
MN3S0 MN4S0
4SA/B0
4KA/B
4KA/B (mastr)
4F
4F (mastr)
PV5G GMF
PV5 GMF
PV5S-0
3QR 3QB
MV3QR
3MA/B0
3PA/B
P/M/B
NP/NAP/ NVP
4F*0EX
4F*0E
HMV HSV
2QV 3QV
SKH
PCD
Silencer
TotAirSys (Total Air)
TotAirSys (Gamma)
Ending

Manifold option

Optional descriptions	Model No. ISO size 1	Model No. ISO size 2	Remarks
1. Independent air supply spacer 	CMF1-P-02 (Rc1/4) 03 (Rc3/8)	CMF2-P-03 (Rc3/8) 04 (Rc1/2)	1. For individual air supply port Clamp/used for differing pressures 2. For exhaust pressurization Individual exhaust
2. Independent exhaust spacer 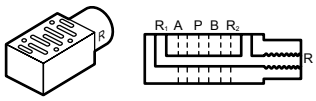	CMF1-R-02 (Rc1/4) 03 (Rc3/8)	CMF2-R-03 (Rc3/8) 04 (Rc1/2)	1-port exhaust with individual exhaust (back pressure countermeasures)
3. Adaptor 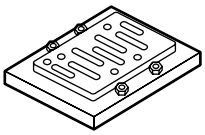	CU1-00 (FS/FD2 Series, Rc1/4, 3/8) CU1-01 (FS/FD3 Series, Rc1/4, 3/8, 1/2)	CU2-00 (FS/FD3 Series, Rc1/4, 3/8, 1/2) CU2-01 (FS/FD4 Series, Rc1/2, 3/4)	PV5-6R, PV5-8R are installed on conventional model type F $^{S2}_{D3}$ (Custom order product).
4. Masking plate 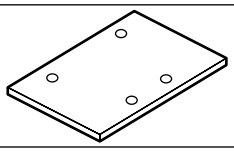	CM1-00	CM2-00	For PV5-6R For PV5-8R For discrete masking
5. Flow path cutoff plate 	GM1-01	GM2-01	Manifold (GMF1/GMF2) P/R_1/R_2 port For masking
6. Base gasket 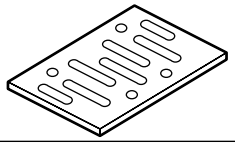	PV5G-6-BASE-GASKET	PV5G-8-BASE-GASKET	For PV5-6R For PV5-8R These cannot be used on the bottom surface of the spacers.
	PV5-6-BASE-GASKET	PV5-8-BASE-GASKET	For the bottom surface of spacers
7. Mounting screw 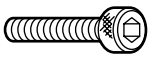	CMF1-M5X35	CMF2-M6X45	Set of 4
8. Spacer regulator 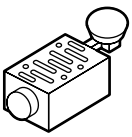	CMF1-SR-P-T05 CMF1-SR-A-T05C CMF1-SR-B-T05C Model No. selection page 1481	CMF2-SR-P-T05 CMF2-SR-A-T05C CMF2-SR-B-T05C Model No. selection page 1485	Use with different pressures
9. Air pilot check valve 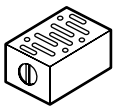	CMF1-PC	CMF2-PC	Retain custom position of cylinder
10. Foot U side 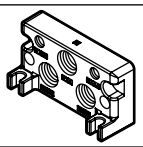	GFB1-$^{03}_{04}$U	GFB2-$^{04}_{06}$U	2 hexagon socket head cap screws, plugs, and a gasket on the U side foot are attached.
D side	GFB1-$^{03}_{04}$D	GFB2-$^{04}_{06}$D	
11. Manifold; block 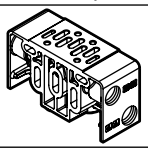	GMFB1-$^{02}_{03}$T	GMFB2-$^{03}_{04}$T	2 tie rods, plug and gasket are attached.
	GMFB1-$^{02}_{03}$Z	GMFB2-$^{03}_{04}$Z	2 tie rods and gasket are attached.
12. Tie rod 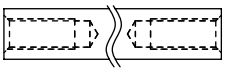	GMF1-TR-V*1 *1: 1 to 10 (station No.)	GMF2-TR-V*1 *1: 1 to 10 (station No.)	Tie rod length is from 1 station to 10 stations, shipped in sets of 2.
13. Tie rod for station expansion 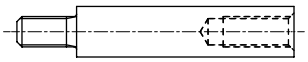	GMF1-TR-VZ	GMF2-TR-VZ	Use these when adding on to the set of 2 tie rods. Length can be added by 1 station.

Manifold

A wide variety of combinable supply, exhaust, and piping methods are available in the lineup.
Select the ideal function for your application.

1 General use

● Common exhaust method

The most common method, in which solenoid valve supply and exhaust is centralized in one location through the use of P (supply) and R (exhaust) ports passing through the connected manifold block interior.

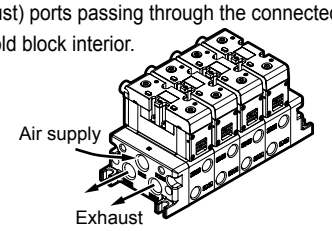

2 Applications for general use

● Individual exhaust method

As the R1/2 (exhaust) ports are independent for each solenoid valve, this prevents the popping out phenomenon of adjacent cylinders caused by back pressure.
Exhaust is processed individually by inserting an independent exhaust spacer (CMF1-R-*) between the manifold block and the valve body.

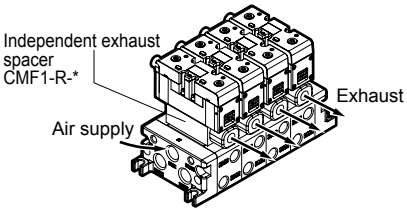

● Individual supply method

As the P (air supply) port is independent for each valve, it is possible to supply a different pressure only to certain valves within the manifold.
Air supply is processed individually by inserting an independent air supply spacer (CMF1-P-*) between the manifold block and the valve body.

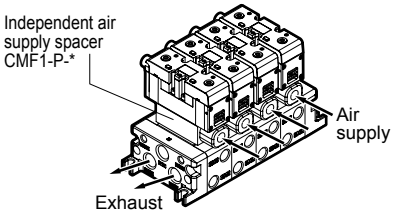

● Individual supply/individual exhaust method

Use this method in order to allow individual configurations for the P (air supply) port and R (exhaust) port of certain valves within the manifold.
Example: When the unit is being used with no lubrication but a certain valve alone must be lubricated

Air supply and exhaust are processed individually by inserting an independent air supply spacer (CMF1-P-*) and an independent exhaust spacer (CMF1-R-*) between the manifold block and the valve body.

● Different pressure supply method

With this method of supplying both higher and lower pressure to a single manifold, a flow path cutoff plate (GM1-01) is inserted between the manifold blocks with different pressures.

3 General/special common descriptions

● Rear piping method

When piping cannot be installed from the side, it is possible to install all or part of the piping of A/B ports from the bottom surface of the manifold.

4GA/B
M4GA/B
MN4GA/B
4GA/B (mastr)
4GD/E
M4GD/E
MN4GD/E
4GA4/B4
MN3E MN4E
W4GA/B2
W4GB4
4TB
4L2-4/ LMF0
MN3S0 MN4S0
4SA/B0
4KA/B
4KA/B (mastr)
4F
4F (mastr)
PV5G GMF
PV5 GMF
PV5S-0
3QR 3QB
MV3QR
3MA/B0
3PA/B
P/M/B
NP/NAP/ NVP
4F*0EX
4F*0E
HMV HSV
2QV 3QV
SKH
PCD
Silencer
TotAirSys (Total Air)
TotAirSys (Gamma)
Ending

Manifold specifications sheet

ISO size 1 I/O connector

Issued / /

Your company name

Contact

Order No.

● Contact ● Quantity Set ● Delivery date /

Slip No.	Order No.

● Manifold model No.

GMF 1 □ - □ □ - □ □ □ - □ □ - □ -TC

Ⓐ ISO size, Ⓑ Station No., Ⓒ A/B Port size, Ⓓ A/B Port position, Ⓔ P/R Port size, Ⓕ P/R Port position, Ⓖ HY configuration, Ⓗ Silencer box, Ⓘ Manifold option, Ⓙ Valve option

Ⓐ ISO size		Ⓑ Station No.		Ⓒ A/B Port size		Ⓓ A/B Port position		Ⓔ P/R Port size		Ⓕ P/R Port position		Ⓖ HY configuration		Ⓗ Silencer box		Ⓘ Manifold option	
1	PV5-6R	1	1 station	02	Rc1/4	Blank	Right	03	Rc3/8	B	Top/bottom sides	Blank	When other than HY is selected with Ⓔ	Blank	None	Blank	None
		to	to	03	Rc3/8	L	Left/right sides	04	Rc1/2	D	Bottom side			SB	Yes (D installation)	F	P/A/B port filter equipped
		10	10 stations	HX1	Rc1/4 / Rc3/8 mixture	H	Left	HY1	Rc3/8 / Rc1/2 mixture	U	Top side	DU	Rc3/8 on bottom, Rc1/2 on top				
						Z	Rear side			E	P: top/R: bottom						
						T	Plug attached			F	P: bottom/R: top	UD	Rc3/8 on top, Rc1/2 on bottom				
										T	Plug attached						

Ⓙ Valve option	
Blank	None
A	Coolant proof

Note: Item Ⓙ is when the manifold is assembled and the mounted valve option has been selected.

⚠ Only available with rated voltage of 24 VDC and with surge suppressor and lamp.

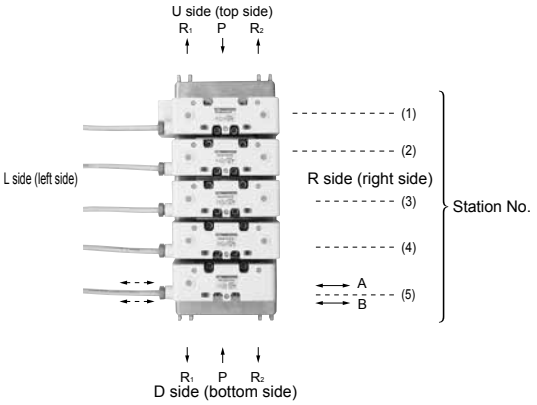

★ When placing an order, list the solenoid valve model No. (1) to (6), (9) from the figure at left in the following field for the solenoid valve model No.
When selecting options, mark the corresponding field for the option below with a circle.

Station No			1	2	3	4	5	6	7	8	9	10
Solenoid valve model No.	PV5-6R											
When L has been selected with Ⓓ, designate the plug position		R										
		L										
Option	Air supply spacer											
	Exhaust spacer											
	Pilot check valve											
	Spacer regulator	CMF*-SR-P										
		CMF*-SR-A										
		CMF*-SR-B										
	Flow path cutoff plate	Air supply path cutoff plate										
		Exhaust path cutoff plate										
	When Ⓒ is HX, specify the mixed configuration of the bore size.	02										
		03										

	Solenoid valve model No.	
2-position single 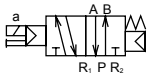	PV5-6R-FG-S-TC	(1)
2-position double 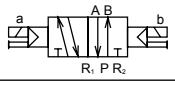	PV5-6R-FG-D-TC	(2)
3-position all ports closed 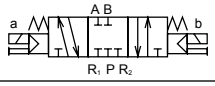	PV5-6R-FHG-D-TC	(3)
3-position A-B-R connection 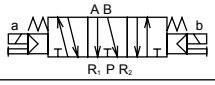	PV5-6R-FJG-D-TC	(4)
3-position P-A-B connection 	PV5-6R-FIG-D-TC	(5)
3-position all ports closed non-leaking 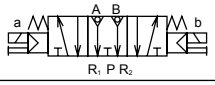	PV5-6R-FPG-D-TC	(6)
Masking plate	CM1-00	(9)

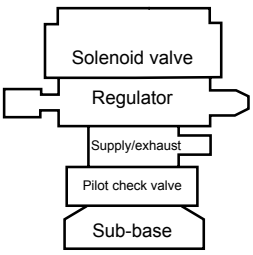

Order of assembly of options (spacers)

Note) The order from the sub-base to the solenoid valve is basically as shown in the figure at left. For spacers not in use, simply remove them and stack the rest as shown in the figure.

Manifold specifications sheet

ISO size 2 I/O connector

Issued / /

Your company name

Contact

Order No.

● Contact ● Quantity Set ● Delivery date /

Slip No.	Order No.

● Manifold model No.

GMF 2 □ - □ □ - □ □ □ - □ □ - □ -TC

Ⓐ ISO size — Ⓑ Station No. — Ⓒ A/B Port size — Ⓓ A/B Port position — Ⓔ P/R Port size — Ⓕ P/R Port position — Ⓖ HY configuration — Ⓗ Silencer box — Ⓘ Manifold option — Ⓙ Valve option

Ⓐ ISO size		Ⓑ Station No.		Ⓒ A/B Port size		Ⓓ A/B Port position		Ⓔ P/R Port size		Ⓕ P/R Port position		Ⓖ HY configuration		Ⓗ Silencer box		Ⓘ Manifold option	
2	PV5-8R	1	1 station	03	Rc3/8	Blank	Right	04	Rc1/2	B	Top/bottom sides	Blank	When other than HY is selected with Ⓔ	Blank	None	Blank	None
		to	to	04	Rc1/2	L	Left/right sides	06	Rc3/4	D	Bottom side			SB	Yes (D installation)	F	P/A/B port filter equipped
		10	10 stations	HX2	Rc3/8 / Rc1/2 mixture	H	Left	HY2	Rc1/2 / Rc3/4 mixture	U	Top side	DU	Rc1/2 on bottom, Rc3/4 on top				
						Z	Rear side			E	P: top/R: bottom						
						T	Plug attached			F	P: bottom/R: top	UD	Rc1/2 on top, Rc3/4 on bottom				
										T	Plug attached						

Ⓙ Valve option	
Blank	None
A	Coolant proof

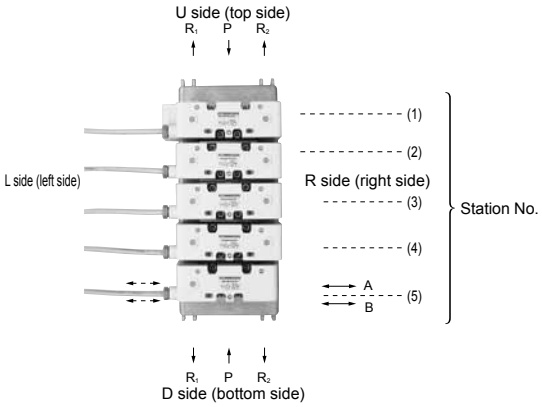

Note: Item Ⓙ is when the manifold is assembled and the mounted valve option has been selected.

⚠ Only available with rated voltage of 24 VDC and with surge suppressor and lamp.

★ When placing an order, list the solenoid valve model No. (1) to (6), (9) from the figure at left in the following field for the solenoid valve model No. When selecting options, mark the corresponding field for the option below with a circle.

Station No			1	2	3	4	5	6	7	8	9	10
Solenoid valve model No.	PV5-8R											
When L has been selected with Ⓓ, designate the plug position		R										
		L										
Option	Air supply spacer											
	Exhaust spacer											
	Pilot check valve											
	Spacer regulator	CMF*-SR-P										
		CMF*-SR-A										
		CMF*-SR-B										
	Flow path cutoff plate	Air supply path cutoff plate										
		Exhaust path cutoff plate										
	When Ⓒ is HX, specify the mixed configuration of the bore size.	03										
		04										

		Solenoid valve model No.	
2-position single	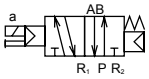	PV5-8R-FG-S-TC	(1)
2-position double	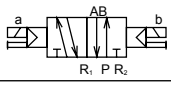	PV5-8R-FG-D-TC	(2)
3-position all ports closed	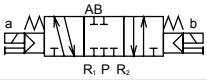	PV5-8R-FHG-D-TC	(3)
3-position A-B-R connection	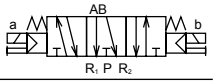	PV5-8R-FJG-D-TC	(4)
3-position P-A-B connection		PV5-8R-FIG-D-TC	(5)
3-position all ports closed non-leaking	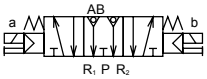	PV5-8R-FPG-D-TC	(6)
Masking plate		CM2-00	(9)

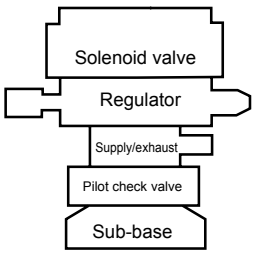

Order of assembly of options (spacers)

Note) The order from the sub-base to the solenoid valve is basically as shown in the figure at left. For spacers not in use, simply remove them and stack the rest as shown in the figure.

4GA/B
M4GA/B
MN4GA/B
4GA/B (mastr)
4GD/E
M4GD/E
MN4GD/E
4GA4/B4
MN3E MN4E
W4GA/B2
W4GB4
4TB
4L2-4/ LMF0
MN3S0 MN4S0
4SA/B0
4KA/B
4KA/B (mastr)
4F
4F (mastr)
PV5G GMF
PV5 GMF
PV5S-0
3QR 3QB
MV3QR
3MA/B0
3PA/B
P/M/B
NP/NAP/ NVP
4F*0EX
4F*0E
HMV HSV
2QV 3QV
SKH
PCD
Silencer
TotAirSys (Total Air)
TotAirSys (Gamma)
Ending

Manifold specifications sheet

ISO size 1/2 mixture I/O connector

Issued / /

Your company name

Contact

Order No.

● Contact ● Quantity Set ● Delivery date /

Slip No.	Order No.

● Manifold model No.

GMF Z □ - □ □ - □ □ □ - □ -TC

Ⓐ ISO size Ⓑ Station No. Ⓒ A/B Port size Ⓓ A/B Port position Ⓔ P/R Port size Ⓕ P/R Port position Ⓖ HY configuration Ⓗ Manifold option Ⓘ Valve option

Ⓐ ISO size		Ⓑ Station No.		Ⓒ A/B Port size		Ⓓ A/B Port position		Ⓔ P/R Port size		Ⓕ P/R Port position		Ⓖ HY configuration		Ⓗ Manifold option		Ⓘ Valve option	
Z	Mixture of size 1 and 2	1	1 station	HX3	1:02/2:03	Blank	Right	HY3	1:03/2:04	B	Top/bottom sides	DU	Size 1 on bottom and size 2 on top	Blank	None	Blank	None
		to	to	HX4	1:02/2:04	L	Left/right sides	HY4	1:03/2:06	D	Bottom side			F	P/A/B port filter equipped	A	Coolant proof
		10	10 stations	HX5	1:03/2:03	H	Left	HY5	1:04/2:04	U	Top side	UD	Size 1 on top and size 2 on bottom				
				HX6	1:03/2:04	Z	Rear side	HY6	1:04/2:06	E	P: top/R: bottom						
						T	Plug attached			F	P: bottom/R: top						
										T	Plug attached						

Note: Item ❶ is when the manifold is assembled and the mounted valve option has been selected.

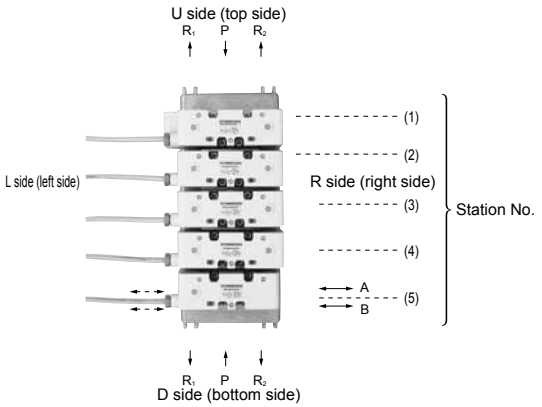

⚠ Only available with rated voltage of 24 VDC and with surge suppressor and lamp.

★ When placing an order, list the solenoid valve model No. (1) to (6), (9) from the figure at left in the following field for the solenoid valve model No. When selecting options, mark the corresponding field for the option below with a circle.

Station No			1	2	3	4	5	6	7	8	9	10
Solenoid valve model No.	PV5-6R											
	PV5-8R											
When L has been selected with Ⓓ, designate the plug position		R										
		L										
Option	Air supply spacer											
	Exhaust spacer											
	Pilot check valve											
	Spacer regulator	CMF*-SR-P										
		CMF*-SR-A										
		CMF*-SR-B										
	Flow path cutoff plate	Air supply path cutoff plate										
		Exhaust path cutoff plate										
	When Ⓒ is HX, specify the mixed configuration of the bore size.	02										
		03										
		04										

		Solenoid valve model No.	
2-position single		PV5-*R-FG-S-TC	(1)
2-position double		PV5-*R-FG-D-TC	(2)
3-position all ports closed	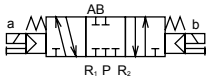	PV5-*R-FHG-D-TC	(3)
3-position A-B-R connection	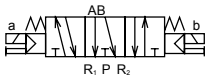	PV5-*R-FJG-D-TC	(4)
3-position P-A-B connection		PV5-*R-FIG-D-TC	(5)
3-position all ports closed non-leaking	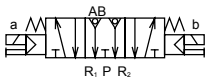	PV5-*R-FPG-D-TC	(6)
Masking plate		CM*-00	(9)

Note) The * marking for solenoid valve is either "6" or "8". With the masking plate and options, this will be either "1" or "2".

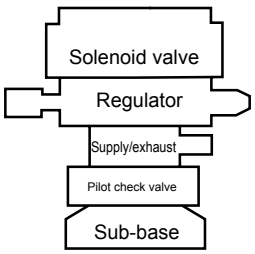

Order of assembly of options (spacers)

Note) The order from the sub-base to the solenoid valve is basically as shown in the figure at left. For spacers not in use, simply remove them and stack the rest as shown in the figure.

PV5S-0

ISO compliant master valve

Pilot operated 5-port valve

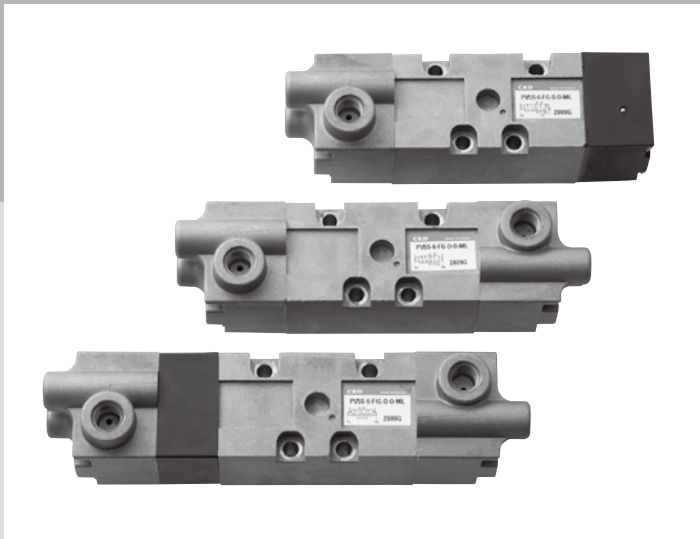

No need to install an indicator
Easy to check the operation of the valve

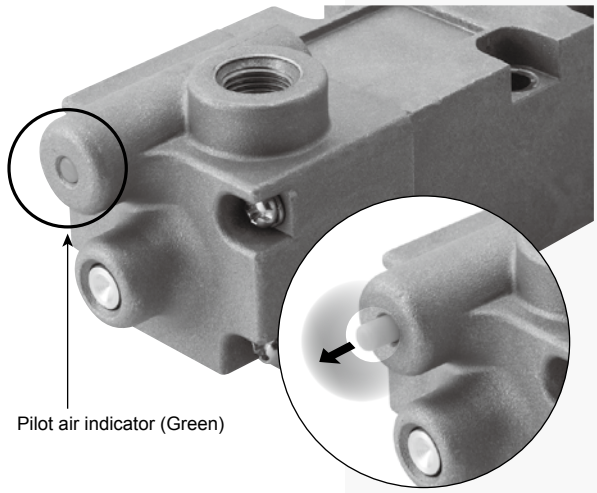

* Indicator protrudes when pilot air is supplied.

Easily visible

The operating status can be clearly seen from both top and side.

Reduced installation steps

As it is equipped with an air indicator, there is no need to install one.

Direct operation without air

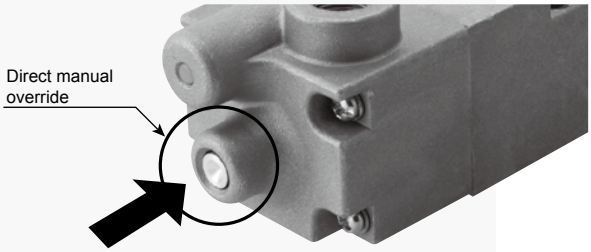

Switching is possible by pressing the spool even with no pilot air supplied.

Reduces occupied space

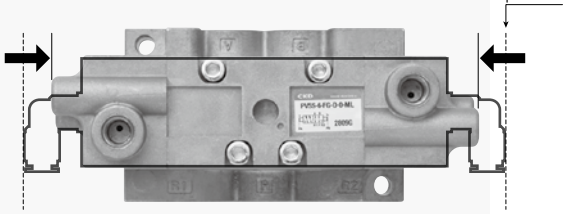

Occupied space reduced by 16% compared with conventional model (PV5-6 Double)

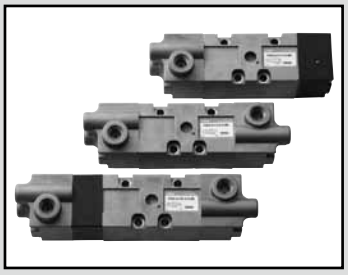

ISO compliant master valve

PV5S-0 Series

● Cylinder bore size: max. φ100 (PV5S-6-0)
max. φ160 (PV5S-8-0)

RoHS

JIS symbol

● 5-port valve

2-position single (FG-S)

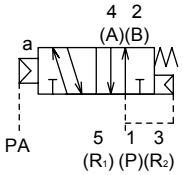

2-position double (FG-D)

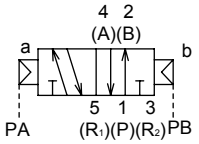

3-position all ports closed (FHG)

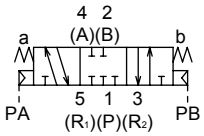

3-position A/B/R connection (FJG)

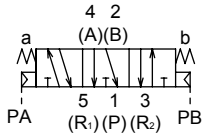

3-position P/A/B connection (FIG)

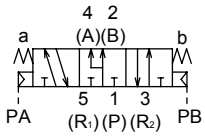

Specifications

Descriptions	Content
Valve and operation	Pilot operated soft spool valve
Working fluid	Compressed air
Max. working pressure MPa	1.0 (≈150 psi, 10 bar)
Min. working pressure MPa	Refer to main pressure section in the table below
Proof pressure MPa	1.50 (≈220 psi, 15 bar)
Ambient temperature °C	-5 (23°F) to 60 (140°F) (no freezing)
Fluid temperature °C	5 (41°F) to 60 (140°F)
Lubrication	Not required
Vibration resistance m/s^2	50 or less
Shock resistance m/s^2	300 or less
Atmosphere	Cannot be used in corrosive gas environment.

Individual specifications

1 MPa ≈ 145.0 psi, 1 MPa = 10 bar

Model No.	Solenoid position	Pilot port PA/PB	Main pressure [MPa]	Pilot pressure [MPa]
PV5S-6	2-position single	Rc1/8	0.15 to 1.0	(0.6 × main pressure + 0.06) to 1.0
	2-position double		0 (≈0 psi, 0 bar) to 1.0 (≈150 psi, 10 bar)	0.15 to 1.0
	3-position all ports closed			0.25 to 1.0
	3-position A/B/R connection			
	3-position P/A/B connection			
PV5S-8	2-position single	Rc1/8	0.15 to 1.0	(0.6 × main pressure + 0.06) to 1.0
	2-position double		0 (≈0 psi, 0 bar) to 1.0 (≈150 psi, 10 bar)	0.15 to 1.0
	3-position all ports closed			0.25 to 1.0
	3-position A/B/R connection			
	3-position P/A/B connection			

Weight

Model No.	Solenoid position	Weight [kg]
PV5S-6	2-position single	0.31
	2-position double	0.36
	3-position	0.39
PV5S-8	2-position single	0.48
	2-position double	0.52
	3-position	0.56

*1: The weight listed is the weight without the sub-plate and option code ML.

Flow characteristics

C[dm^3/(s·bar)]

Model No.	Solenoid position	P ⇒ A/B	A/B ⇒ R
PV5S-6	2-position single	4 or more	4 or more
	2-position double		
	3-position all ports closed		
	3-position A/B/R connection		
	3-position P/A/B connection		
PV5S-8	2-position single	9 or more	9 or more
	2-position double		
	3-position all ports closed		
	3-position A/B/R connection		
	3-position P/A/B connection		

*2: Effective cross-sectional area S and sonic conductance C are converted as S ≈ 5.0 x C.

How to order

PV5S - 6 - FG-S - 0 - ML - A02

- PV5S: Model No.
- 6: ISO size 1: 6; ISO size 2: 8
- FG-S: Ⓐ Solenoid position
- 0: Master valve
- ML: Ⓑ Option
- A02: Ⓒ Sub-plate

Code	Content	Model No. PV5S-6	Model No. PV5S-8
Ⓐ Solenoid position			
FG-S	2-position single	●	●
FG-D	2-position double	●	●
FHG-D	3-position all ports closed	●	●
FJG-D	3-position ABR connection	●	●
FIG-D	3-position PAB connection	●	●
Ⓑ Option			
M	With direct manual override	●	●
ML	With direct manual override, with pilot air indicator	●	●
Ⓒ Sub-plate			
Blank	Without sub-plate	●	●
A02	Side piping Rc1/4 (Rc3/8 for R port only)	●	
A03	Side piping Rc3/8 (with PV5S-8, Rc1/2 for R port only)	●	●
A04	Side piping (Rc1/2)		●
A06	Side piping (Rc3/4)		●

ISO size 1 sub-plate specifications and how to order

CB1 - A02

Ⓐ Piping connection method

Code	Type	P/A/B port	R1/R2 port	Weight (kg)
Ⓐ Piping connection method				
A02	Side piping	Rc1/4	Rc 3/8	0.27
A03		Rc3/8		

ISO size 2 sub-plate specifications and how to order

CB2 - A03

Ⓐ Piping connection method

Code	Type	P/A/B port	R1/R2 port	Weight (kg)
Ⓐ Piping connection method				
A03	Side piping	Rc3/8	Rc1/2	0.49
A04		Rc1/2		
A06		Rc3/4	Rc3/4	1.40

These master valves (PV5S-0 series) are not available for shipment with manifold.
When using with a manifold, separately purchase the GMF series.
Refer to pages 1450 to 1461 for details on the GMF series.

4GA/B
M4GA/B
MN4GA/B
4GA/B (mastr)
4GD/E
M4GD/E
MN4GD/E
4GA4/B4
MN3E MN4E
W4GA/B2
W4GB4
4TB
4L2-4/ LMF0
MN3S0 MN4S0
4SA/B0
4KA/B
4KA/B (mastr)
4F
4F (mastr)
PV5G GMF
PV5 GMF
PV5S-0
3QR 3QB
MV3QR
3MA/B0
3PA/B
P/M/B
NP/NAP/ NVP
4F*0EX
4F*0E
HMV HSV
2QV 3QV
SKH
PCD
Silencer
TotAirSys (Total Air)
TotAirSys (Gamma)
Ending

Dimensions: ISO size 1 (without sub-plate)

PV5S-6-FG-S-0-*

● 2-position single

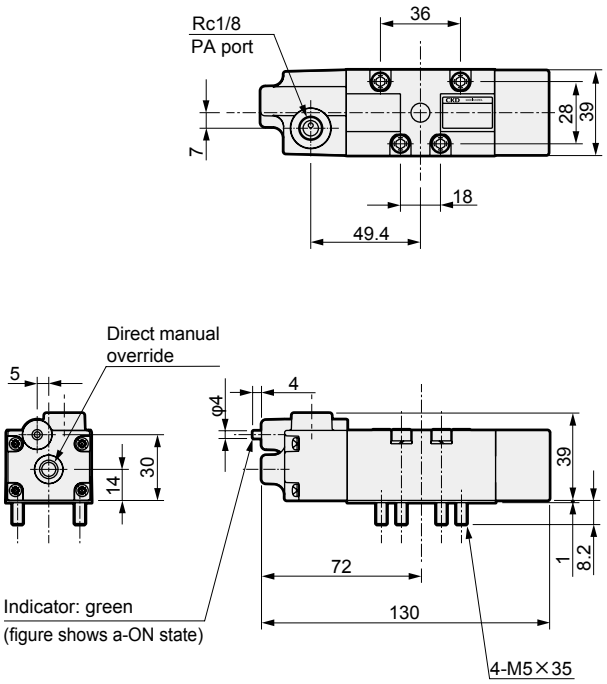

PV5S-6-FG-D-0-*

● 2-position double

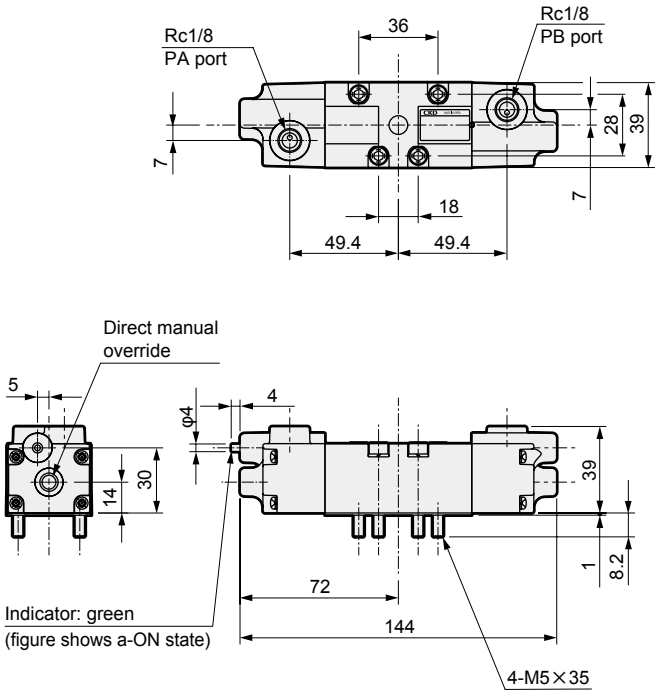

PV5S-6-FHG-D-0-*
PV5S-6-FJG-D-0-*
PV5S-6-FIG-D-0-*

● 3-position

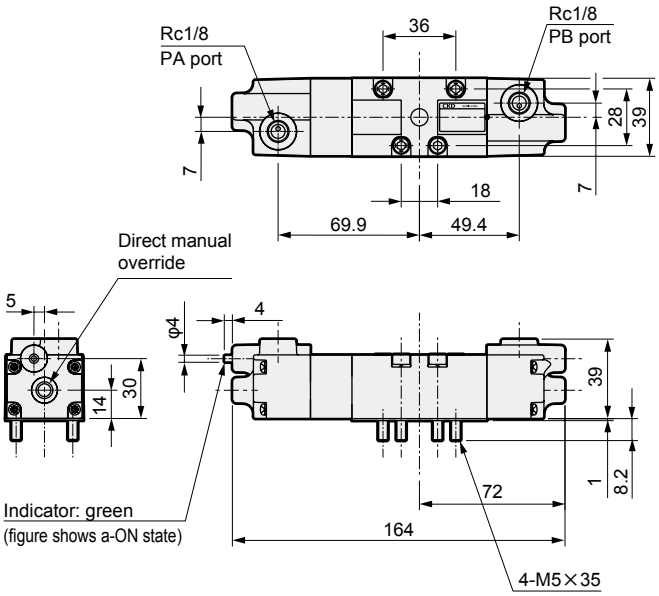

Dimensions: ISO size 1 (with sub-plate)

PV5S-6-FG-S-0-*-A0*

● 2-position single

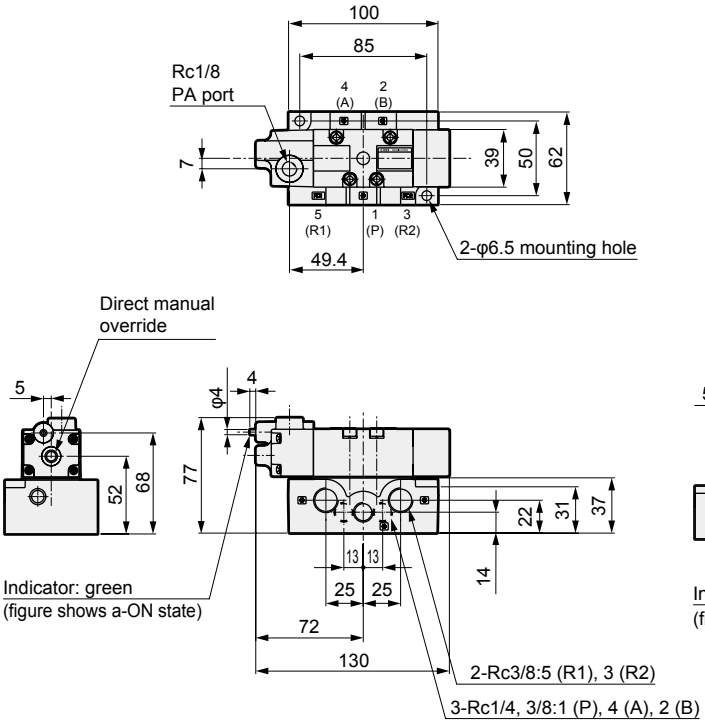

PV5S-6-FG-D-0-*-A0*

● 2-position double

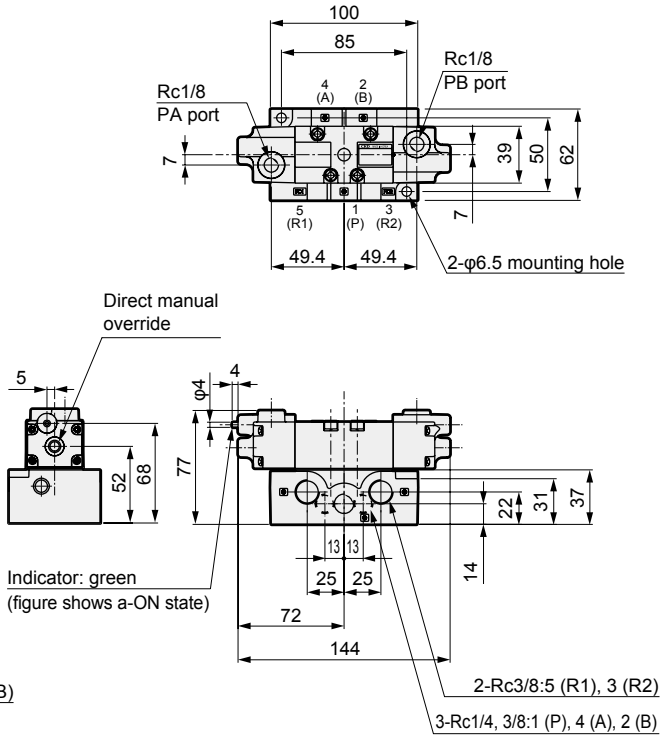

PV5S-6-FHG-D-0-*-A0*
PV5S-6-FJG-D-0-*-A0*
PV5S-6-FIG-D-0-*-A0*

● 3-position

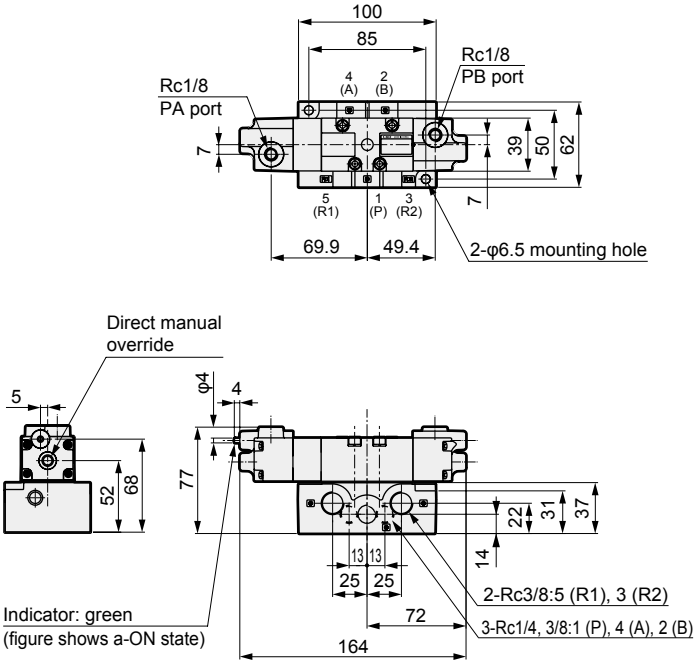

● Sub-plate dimensions

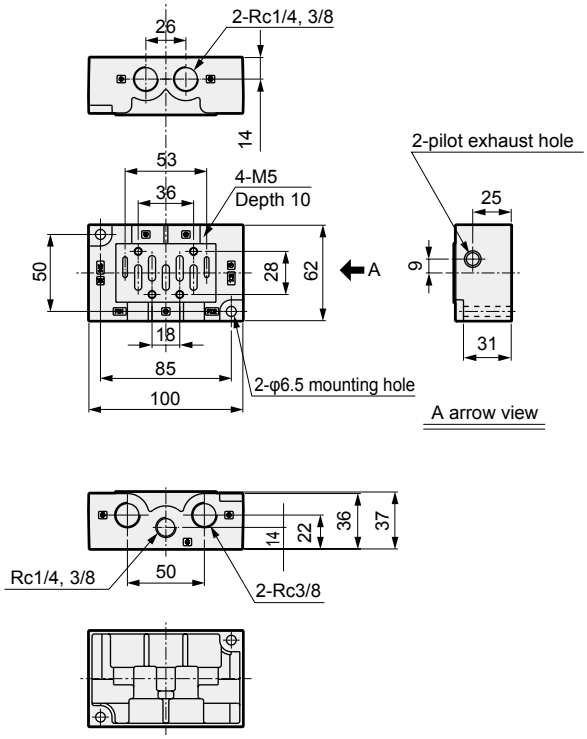

4GA/B
M4GA/B
MN4GA/B
4GA/B (mastr)
4GD/E
M4GD/E
MN4GD/E
4GA4/B4
MN3E MN4E
W4GA/B2
W4GB4
4TB
4L2-4/ LMF0
MN3S0 MN4S0
4SA/B0
4KA/B
4KA/B (mastr)
4F
4F (mastr)
PV5G GMF
PV5 GMF
PV5S-0
3QR 3QB
MV3QR
3MA/B0
3PA/B
P/M/B
NP/NAP/ NVP
4F*0EX
4F*0E
HMV HSV
2QV 3QV
SKH
PCD
Silencer
TotAirSys (Total Air)
TotAirSys (Gamma)
Ending

Dimensions: ISO size 2 (without sub-plate)

PV5S-8-FG-S-0-*

● 2-position single

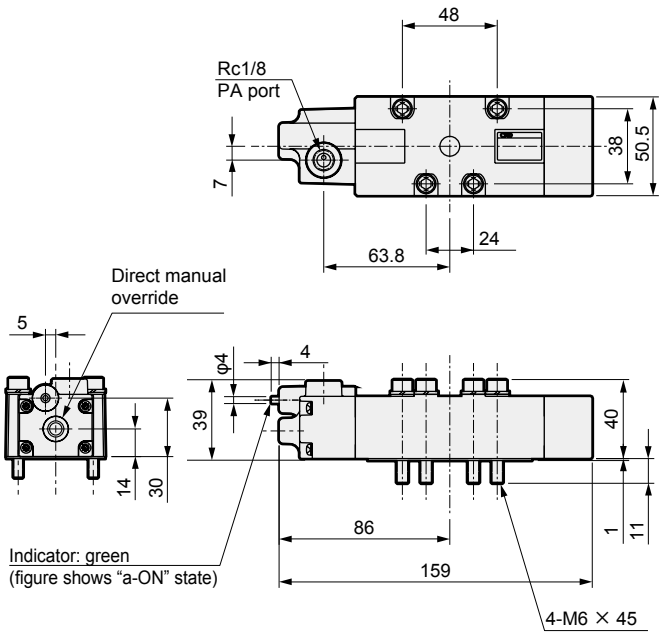

PV5S-8-FG-D-0-*

● 2-position double

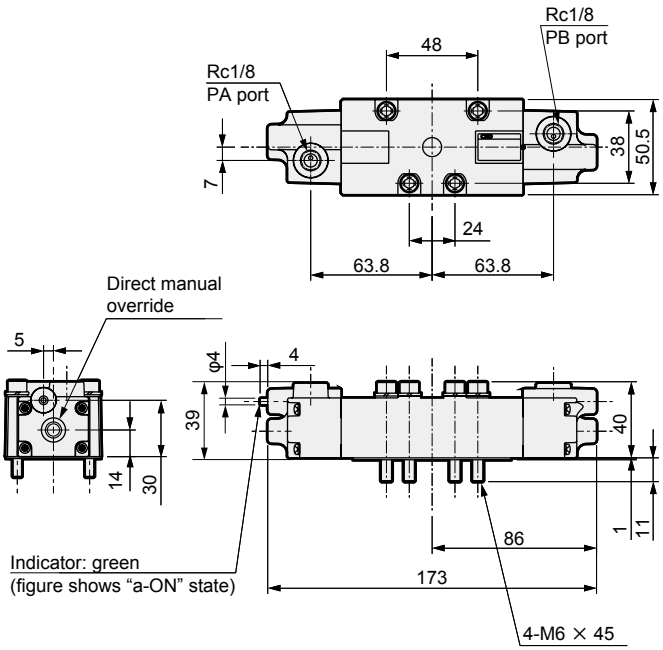

PV5S-8-FHG-D-0-*
PV5S-8-FJG-D-0-*
PV5S-8-FIG-D-0-*

● 3-position

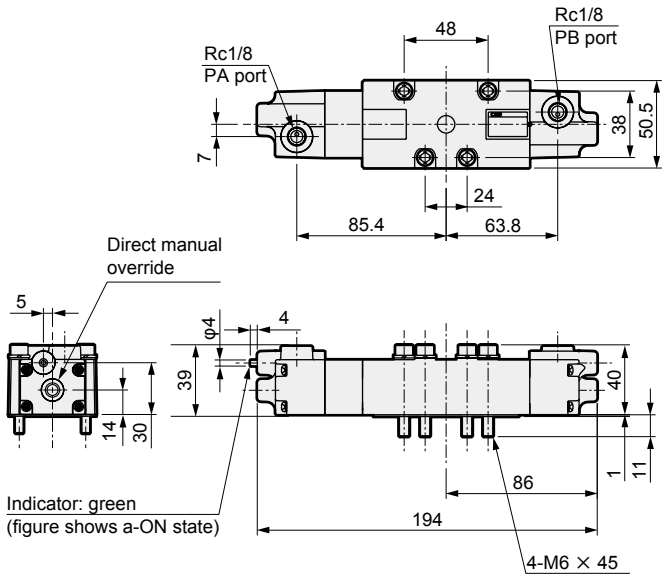

Dimensions: ISO size 2 (with sub-plate)

PV5S-8-FG-S-0-*-A0*

● 2-position single

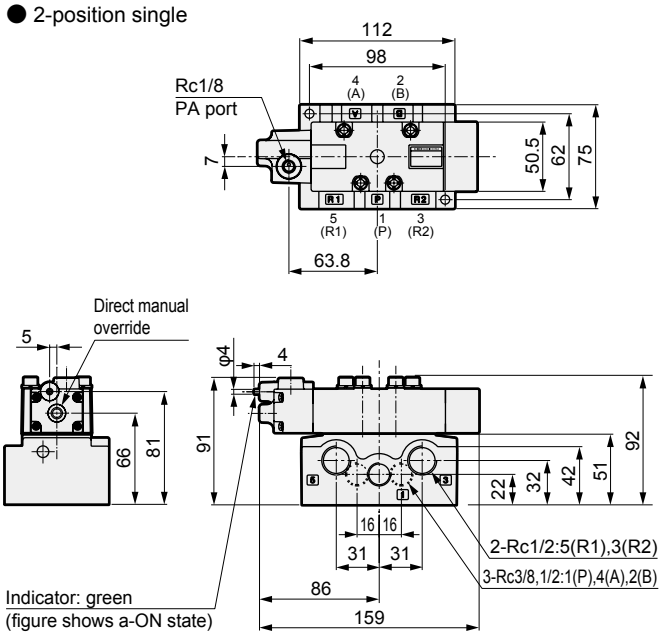

PV5S-8-FG-D-0-*-A0*

● 2-position double

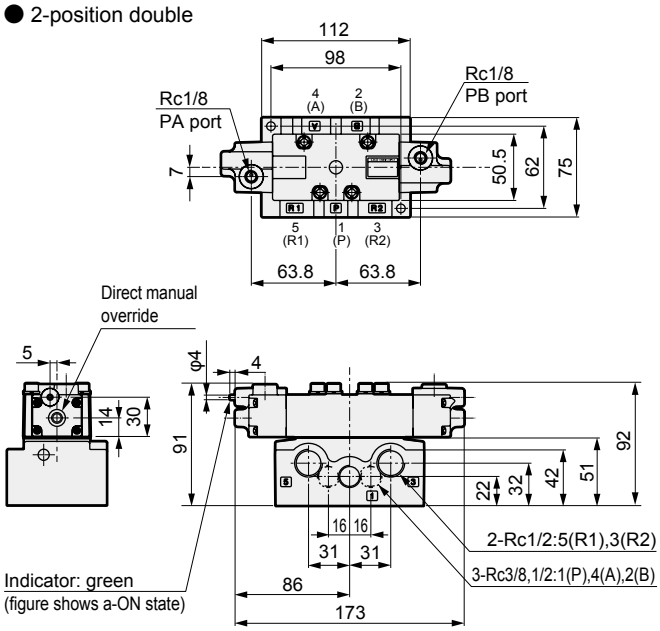

PV5S-8-FHG-D-0-*-A0*
PV5S-8-FJG-D-0-*-A0*
PV5S-8-FIG-D-0-*-A0*

● 3-position

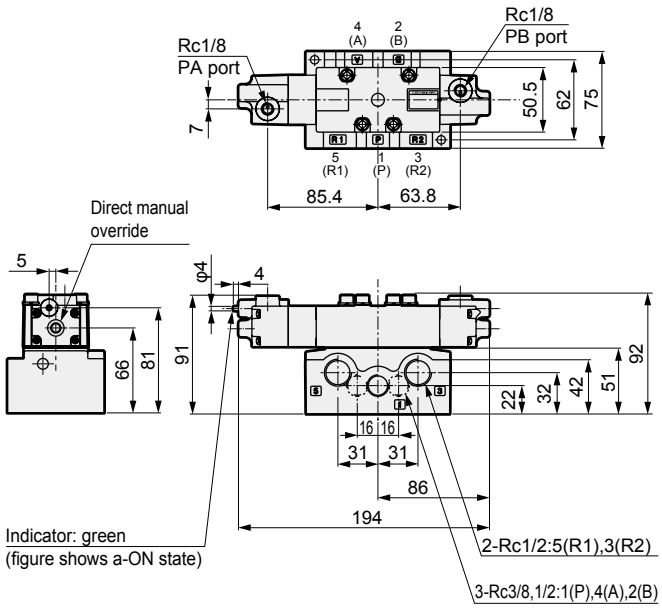

● Sub-plate dimensions

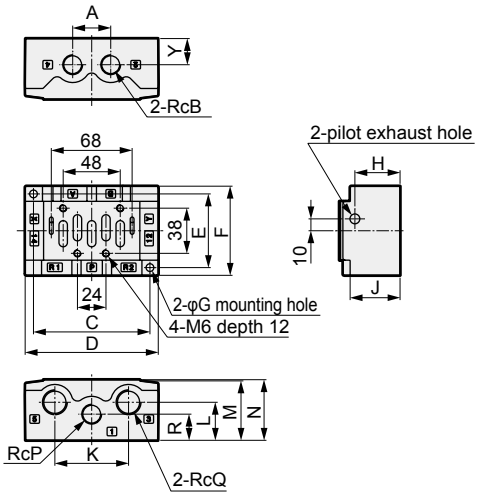

Model No.	CB2-A03	CB2-A04	CB2-A06
A	32		40
B	3/8	1/2	3/4
C	98		128
D	112		142
E	62		72
F	75		86
G	6.5		7.5
H	38		53
J	42		55
K	62		84
L	32		42
M	50		62
N	51		63
P	3/8	1/2	3/4
Q	1/2		3/4
R	22		30

Safety Precautions

Be sure to read this section before use.
Refer to Intro Page 59 for general precautions for using valves.

Product-specific cautions: Pilot operated 5-port valve PV5G/PV5/GMF/PV5S-0 Series

Design/selection

1. Safety design

WARNING

■ Use the product in the range of conditions specified for the product.
The product in this catalog is designed for use only in a compressed air system. Use with pressure or temperature exceeding the specifications range may result in damage or operation faults. (Refer to specifications)
Contact CKD when using fluids other than compressed air.

■ When using a 3-position all ports closed valve with a custom stroke, the properties of compressed air make it impossible to brake at an accurate position. In addition, as valves and cylinders, etc., are designed to allow air leakage, pressure retention applications may cause the stop position to change or cause a pressure drop.

■ Take measures to prevent physical harm or property damage in the event of failure of this product.

CAUTION

■ Check for leakage current to avoid malfunction caused by leakage current from other fluid control components.
When using a programmable controller, leakage current may affect the solenoid valve and cause malfunction.
Note that the values that are affected by leakage current depend on the solenoid valve.

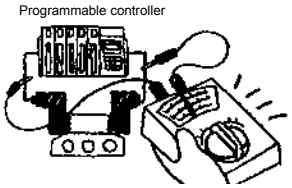

Using 100 VAC	3.0 mA or less
Using 12 VDC	1.5 mA or less
Using 24 VDC	1.8 mA or less

2. Common

WARNING

■ Do not narrow the exhaust port of the manifold valves.
Other cylinders may be subject to unintended operation due to back pressure generated from the exhaust of the switching valve. In this case, individually install a manifold two-sided exhaust or a single exhaust spacer equipped with the valve causing the situation.

CAUTION

■ Make sure that the instantaneous energizing/ manual override of the double solenoid 2 position valve is 0.1 seconds or more.
However, as the cylinder may malfunction due to secondary side load conditions, it is recommended that energizing/manual override is performed until the cylinder reaches the stroke end position.

■ Use dry compressed air that does not cause moisture inside the piping.

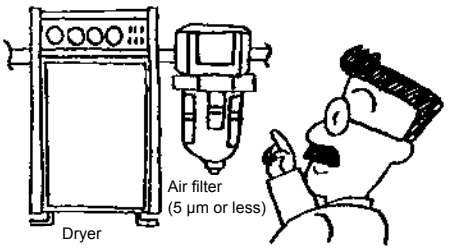

- Moisture will occur if the temperature drops in the pneumatic piping or pneumatic components.
- Operation faults could occur if moisture enters the air flow path of pneumatic components and temporarily blocks passage.
- Moisture could cause rust, making the pneumatic components fail.
- The drain will flush the lubricant oil and cause a lubrication defect.

Design/selection

3. Surge suppressor

⚠CAUTION

■ The surge suppressor attached with the solenoid valve is intended to protect the output contacts for the solenoid valve drive. There is no significant protection for the other peripheral devices, and devices could be damaged or could malfunction due to a surge. As well, surges generated by other devices may be absorbed and cause damage such as burning. Note the following points.

● The surge suppressor functions to limit a voltage surge in the solenoid valve, which can reach several hundred volts, to a low voltage level that the output contact can withstand. Depending on the output circuit used, this may be insufficient and could result in damage or malfunction. Check whether the surge suppressor can be used within the surge voltage limit of the solenoid valve in use, the output device's withstand pressure and circuit structure, and by the degree of return delay time. When necessary, provide other surge countermeasures. The solenoid valve with surge suppressor can suppress the inverse voltage surge that may occur when the solenoid valve is OFF to the level in the table below.

Specification voltage	Inverse voltage when OFF
12 VDC	Approx. 27 V
24 VDC	Approx. 47 V

● If the output unit is an NPN, a surge voltage equaling the voltage shown in the table above plus the power supply voltage may be applied to the output transistor. Make sure to implement a contact protection circuit to avoid the risk.

[Output transistor protection circuit: Installation example 1]

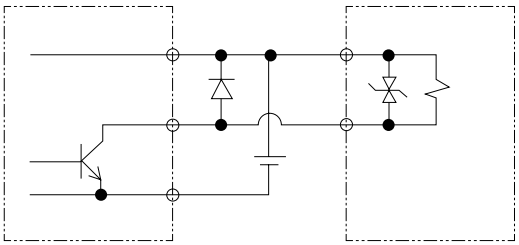

Programmable controller side　　Solenoid valve side

[Output transistor protection circuit: Installation example 2]

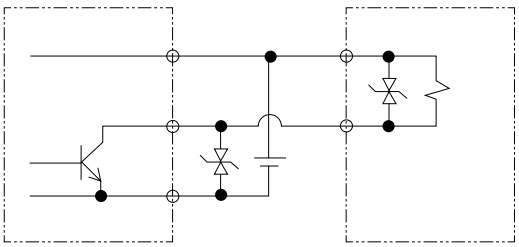

Programmable controller side　　Solenoid valve side

● "When solenoid valves are connected in parallel with other components or solenoid valves, inverse voltage is applied to these components and/or solenoid valves when the solenoid valve is turned OFF. Even in the case of a solenoid valve with 24 VDC surge suppressor, a surge voltage may reach negative tens of volts for some models. This inverse voltage may cause damage or malfunction to other components connected in parallel. Avoid parallel connection of devices susceptible to inverse polarity voltages, e.g., LED indicators. When driving several solenoid valves in parallel, the surge from other solenoid valves may enter the surge suppressor of one solenoid valve, and it may burn depending on the current value. When driving several solenoid valves with surge suppressors in parallel, surge current could concentrate at the surge suppressor with the lowest limit voltage and cause similar burning. Due to the variations in surge suppressor limit voltage that exist even among solenoid valves of the same model No., in the worst case the surge suppressor may burn out. Avoid driving multiple solenoid valves in parallel.

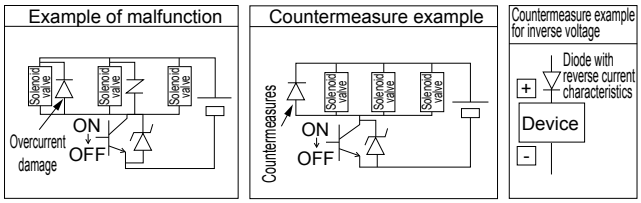

● The surge suppressor incorporated in the solenoid valve will often be short-circuited if it is damaged by overvoltage or overcurrent from other solenoid valves. Where there is a failed surge suppressor, if a large current flows when the output is ON, in the worst case scenario, the output circuit or solenoid valve could be damaged or ignited. Do not continue energizing in a state of failure. Additionally, to prevent large currents from continuing to flow, connect an overcurrent protection circuit to the power supply and drive circuit, or use a power supply with overcurrent protection.

Mounting, installation and adjustment

1. Common

⚠ CAUTION

- When using a pilot check valve (PV5G-*-FPG-D, CMF*-PC), as the cylinder is retained by this pilot check valve, be aware that when the pressure to be supplied next is too low, the unit may not operate due to the pressure balance between the primary side and the secondary side of the poppet valve.

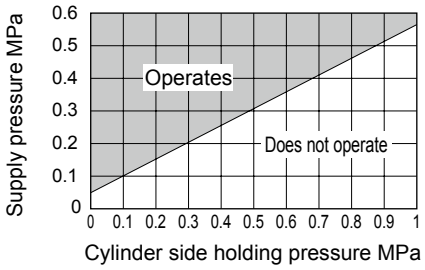

- When back pressure is applied to the exhaust ports R1/R2 while using a pilot check valve, as the cylinder may drop or the midway stopping accuracy may decrease, use as a combination with an independent exhaust spacer (CMF*-R) to prevent the back pressure from being applied as much as possible.
- When transporting the solenoid valves, do not hold by the cables. There is a risk of disconnection.
- Be sure to shut off the power supply externally before installation and wiring. Failure to do so may result in electric shock or damage.
- Check the rated voltage and terminal layout for correct wiring. If the connected power supply is not the rated voltage or wiring is wrong, fire or damage may occur.
- Use the specified torque to tighten the waterproof connector and terminal screw. If tightening is done haphazardly, fire or malfunction may occur.
- Do not use submerged in water.
- Use appropriate torque to tighten the pipes when connecting them.
  The purpose is to prevent air leakage and damage to bolts.
  First tighten the bolts by hand to ensure that the threads are not damaged, then use a tool.

[Reference value]

Port thread	Tightening torque N·m
Rc1/8	3 to 5
Rc1/4	6 to 8
Rc3/8	13 to 15
Rc1/2	16 to 18
Rc3/4	19 to 40

2. DIN terminal box

⚠ CAUTION

- Use a JIS C3312 (600 V vinyl insulated vinyl cable) 2, 3, or 4-conductor (O.D.: φ8.5 to 11.5) cable with a conductor sectional area of 0.75 mm^2 or 1.25 mm^2.
- In order to prevent defective contact and detachment, use a crimping terminal at the tip of the cable. (Example: Use items within 1.25Y-3U, 1.25-3.5S, 1.25-4M, inner diameter M3.5 outer diameter 7 mm.
- Incorrect connections of terminals may cause the unit to malfunction. Refer to page 1436 for the correct connections.

3. Port filter

⚠ CAUTION

- The port filter prevents the entry of foreign matter, and prevents problems from occurring in the valve. As this does not improve the quality of the compressed air, read Warnings and Precautions on Intro Page 61, then mount, install, and adjust the filter accordingly. Do not detach or press down the port filter forcibly. The filter could deform, causing problems. If contaminants and foreign matter are found on the filter surface, blow them lightly, or remove them by tweezers, etc.

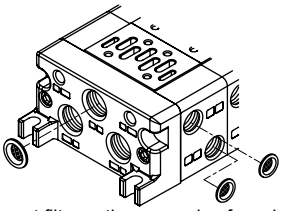

P, A, B port filter option example of combination

Use/maintenance

1. Disassembly/assembly

⚠ WARNING

- Read the relevant product's instruction manual thoroughly and fully familiarize yourself with the work before disassembling or assembling the solenoid valve.
  - Personnel must be fully familiar with solenoid valve structure and operational principles and safety requirements.
  - Pneumatic Pressure Skill Test Class 2 or higher level is required.

2. Pneumatic source

⚠ CAUTION

- The no-lubrication function cannot be maintained once lubrication has been applied to a no-lubrication valve. Once lubrication has been applied, it will be necessary to continue lubricating the valve.
  - Decide on lubrication or no-lubrication for the pneumatic components and ensure that implementation of the corresponding method is properly managed.
  - With the lubrication method, lubricants other than ISO VG32 (no additives) turbine oil cannot be used.

MEMO